Circuit Analysis
EE2101

Week 13-Three-Phase Circuits
Dr YAN Yamin

Lecture notes adapted from Dr Soh Cheong Boon

Overview

- What is a Three-Phase Circuit?
- Balanced Three-Phase Voltages
- Balanced Three-Phase Connection
- Power in a Balanced System
- Unbalanced Three-Phase Systems
- Three-Phase Power Measurement

Note: As a common tradition in power systems, voltages and currents in this chapter are *rms* values unless otherwise stated.

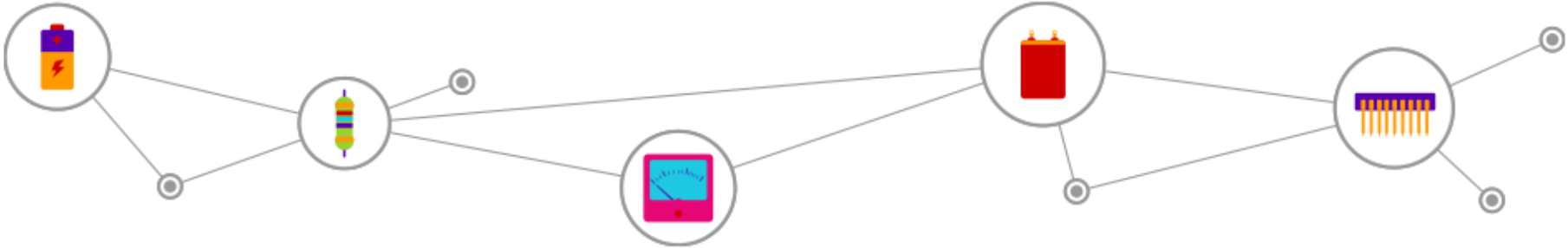

By the end of this lesson, you should be able to…

- Explain what is a three-phase circuit.
- Explain the key characteristics of balanced three-phase voltages.
- Explain the key characteristics of balanced three-phase connections.
- Calculate power in a balanced three-phase system.
- Explain the key characteristics of unbalanced three-phase systems.
- Explain how three-phase power is measured.

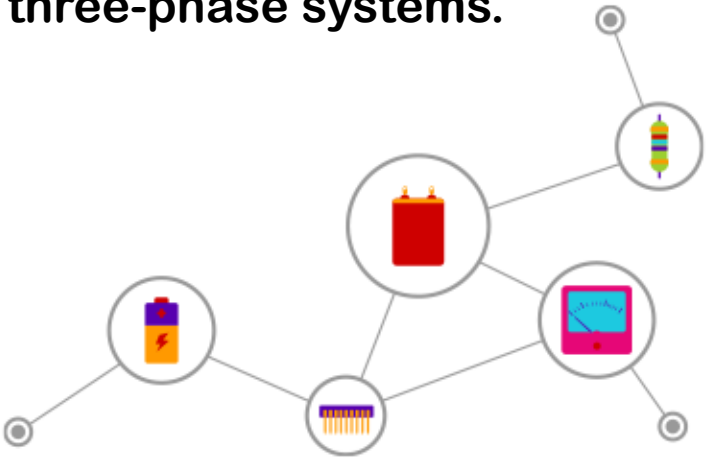

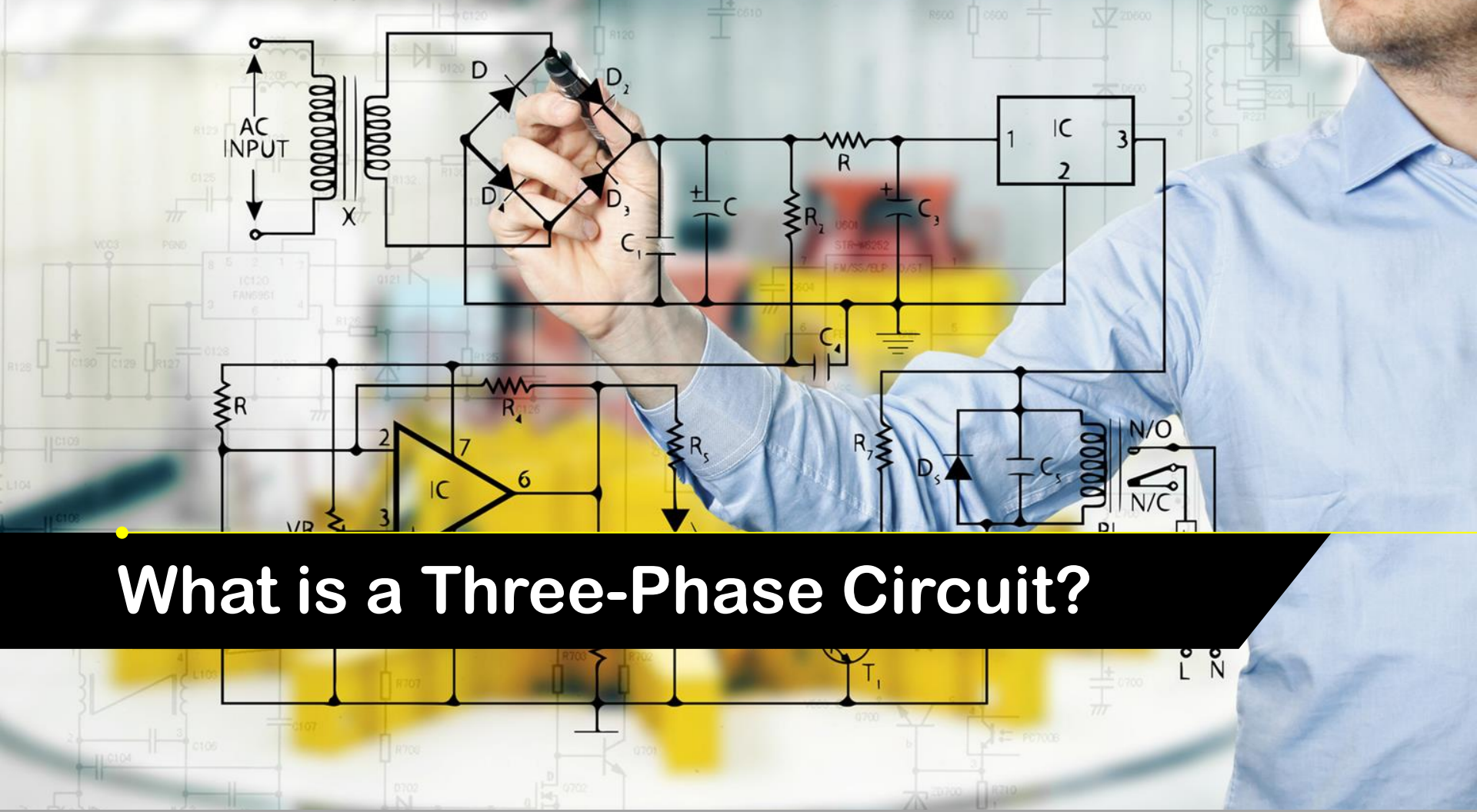

What is a Three-Phase Circuit?

What is a Three-Phase circuit?

It is a system produced by a generator consisting of three sources having the same amplitude and frequency but out of phase with each other by $120°$.

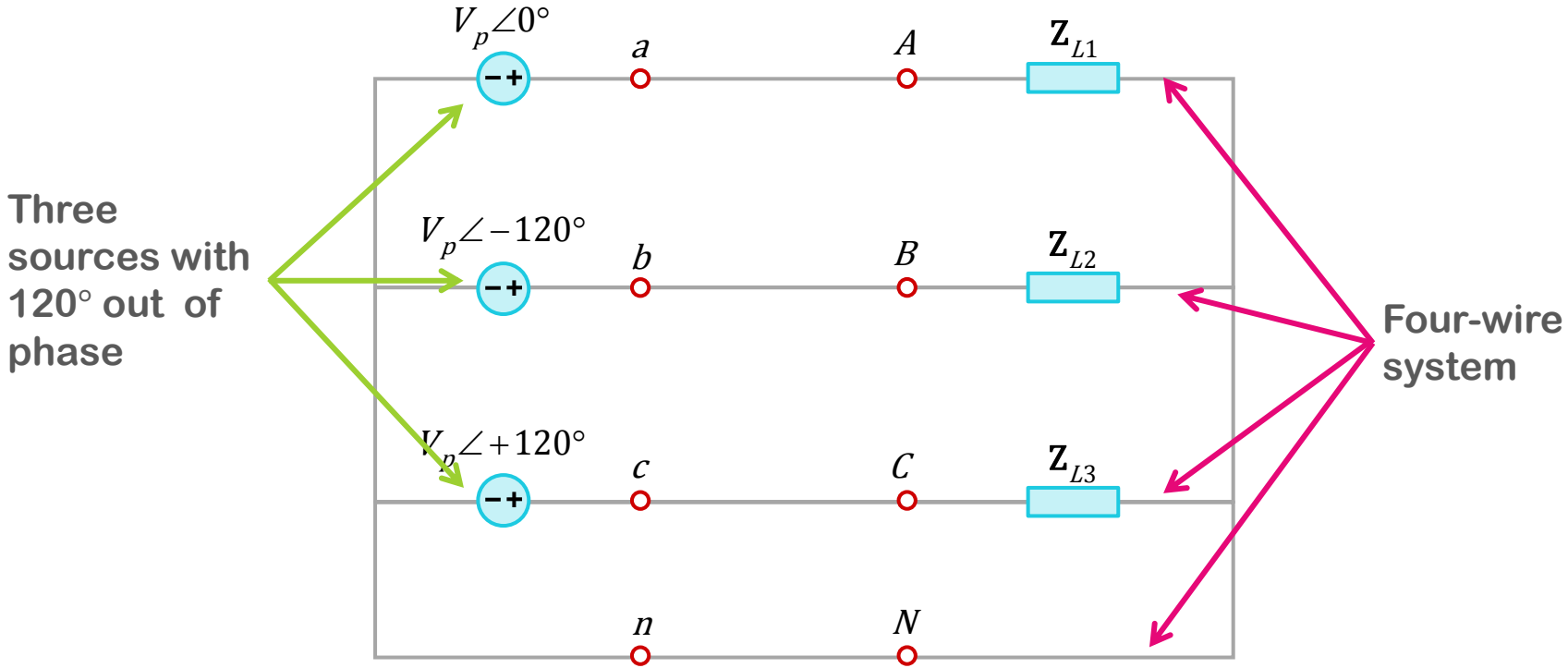

What is a Three-Phase circuit?

Advantages

- Nearly all electric power is generated and distributed in three-phase. When single phase inputs are required, they are taken from the three-phase system.

- The instantaneous power in a three-phase system can be constant. This results in uniform transmission and less vibration of three-phase machines.

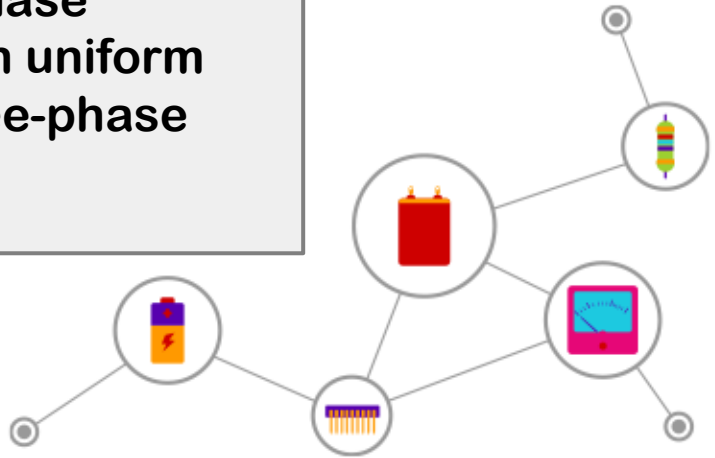

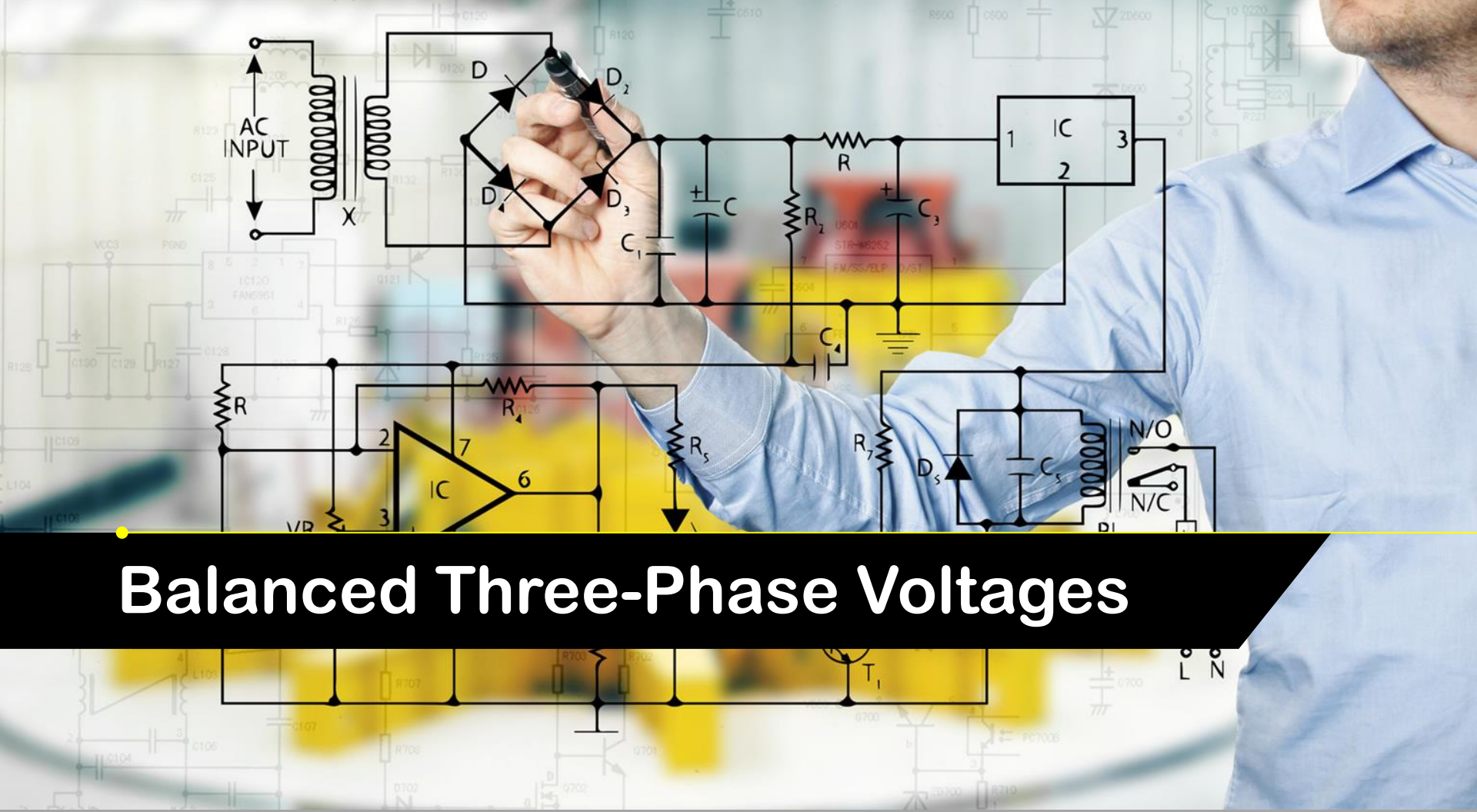

Balanced Three-Phase Voltages

Balanced Three-Phase Voltages

A three-phase generator consists of a rotating magnet (rotor) surrounded by a stationary winding (stator).

Three separate windings with terminals *a-a'*, *b-b'* and *c-c'* are physically placed $120°$ around the stator.

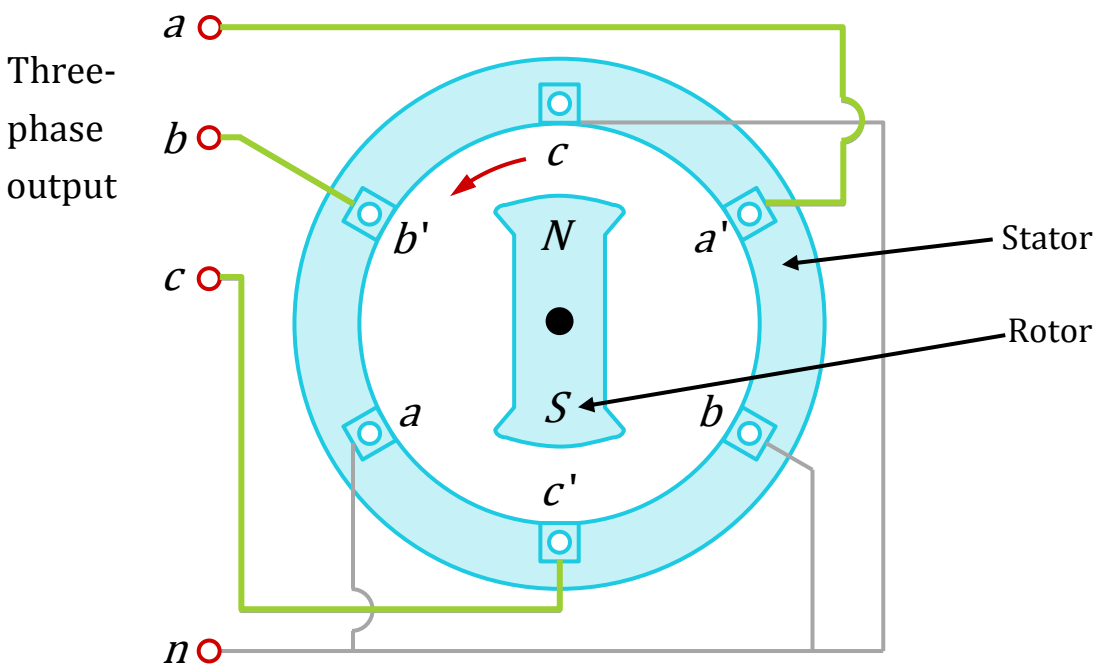

Terminals *a* and *a'* stand for one of the ends of coils going into and the other end coming out of the page.

Balanced Three-Phase Voltages

As the rotor rotates, its magnetic field "cuts" the flux from the three coils and induces voltages in the coils.

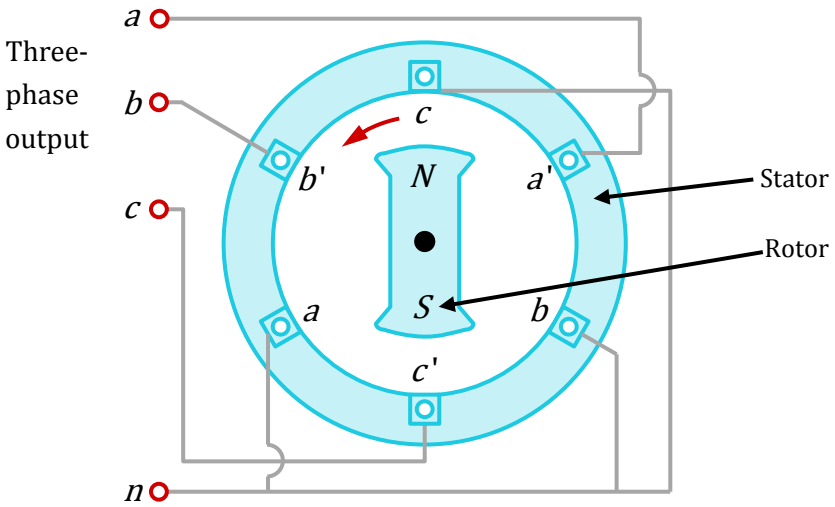

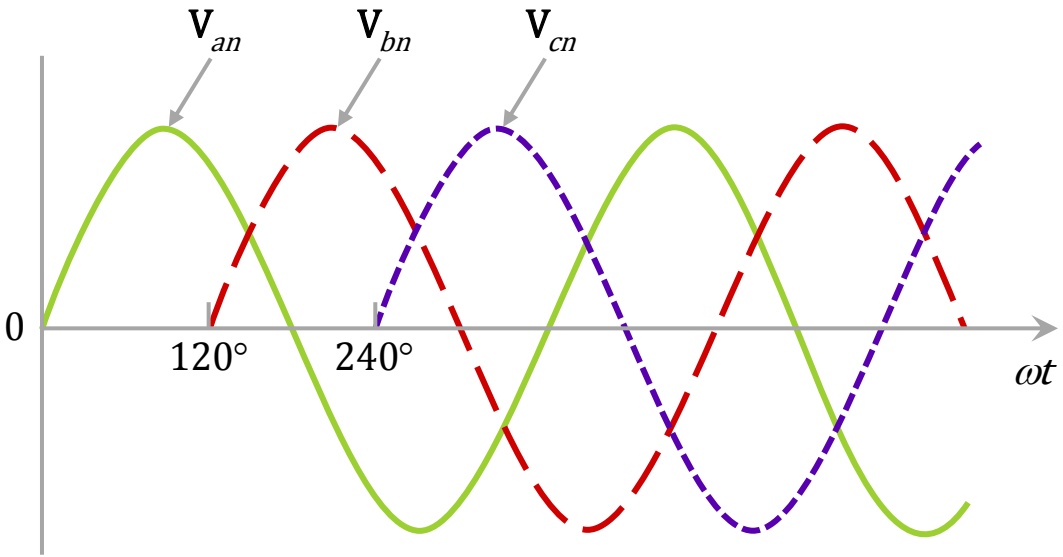

The generated voltages

Balanced Three-Phase Voltages

Because the coils are placed 120° apart, the induced voltages in the coils are equal in magnitude but out of phase by 120°.

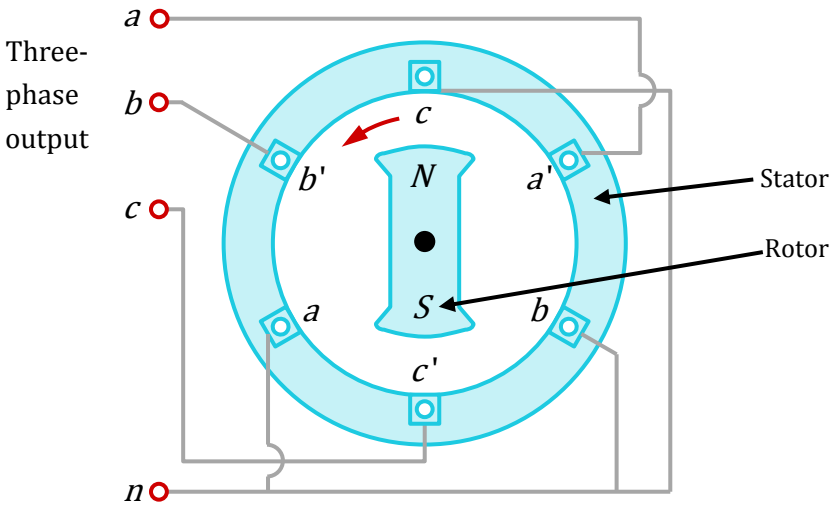

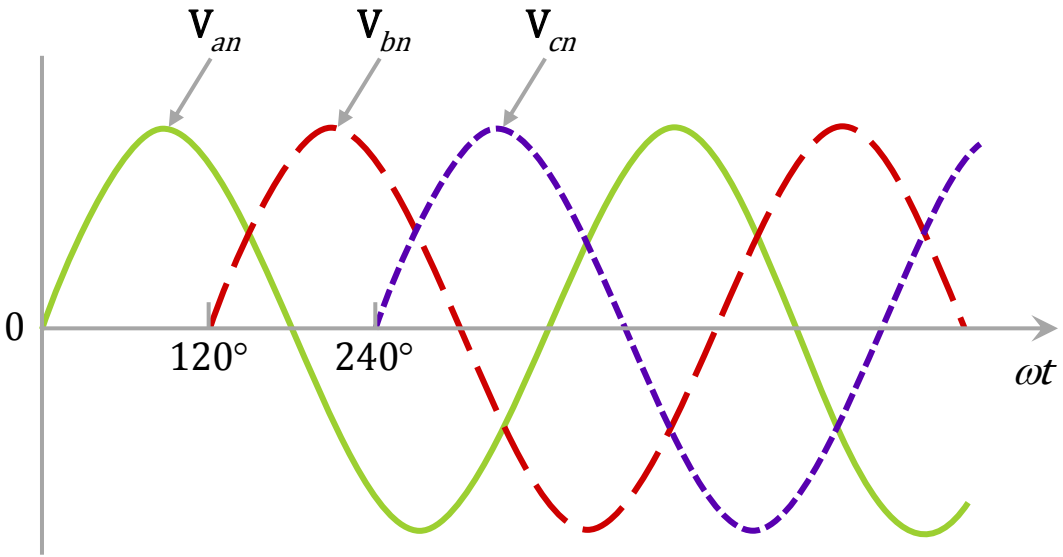

The generated voltages

Balanced Three-Phase Voltages

Since each coil can be regarded as a single-phase generator by itself, the three-phase generator can supply power to both single-phase and three-phase loads.

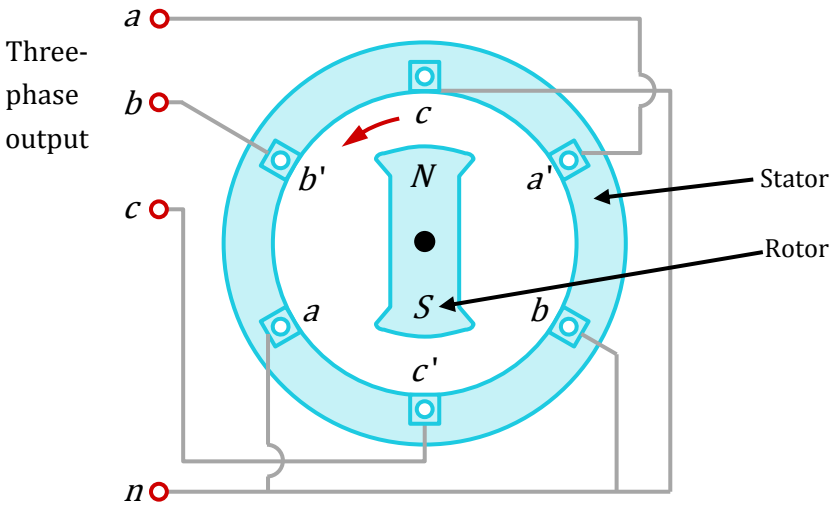

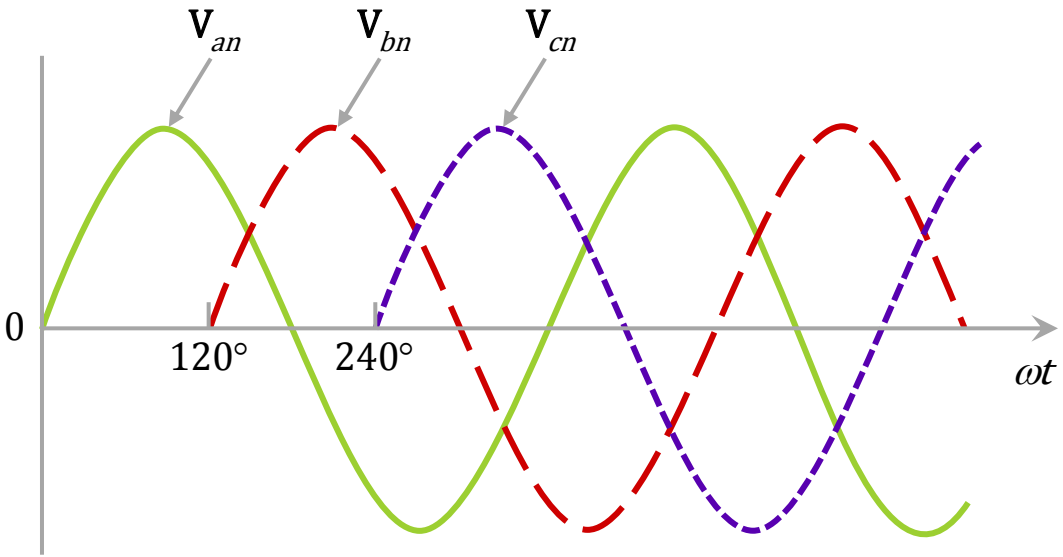

The generated voltages

Balanced Three-Phase Voltages

A typical three-phase system consists of three voltage sources connected to loads by three or four wires (or transmission lines).

The voltage sources can be either wye-connected or delta-connected.

Two possible configurations: three-phase voltage **sources**

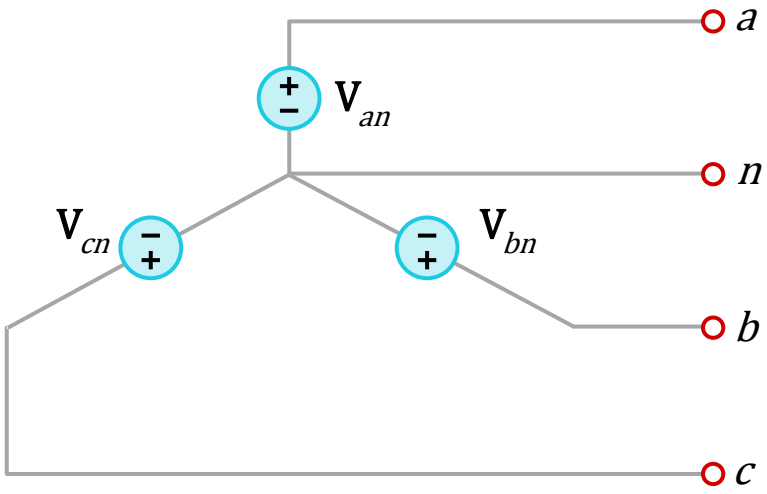

(a) Y-connected

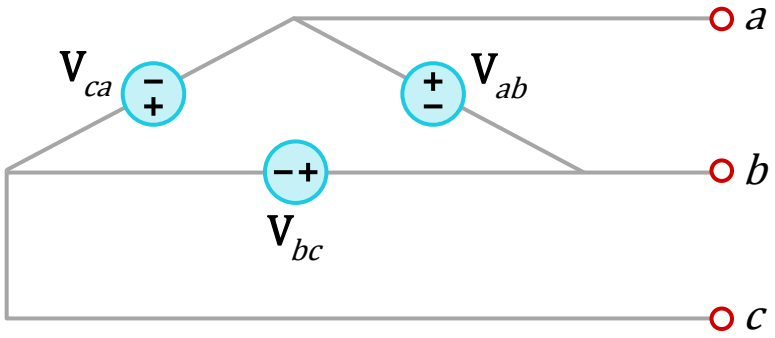

(b) Δ-connected

Balanced Three-Phase Voltages

Consider the Y-connected voltages: phase voltages $\mathbf{V}_{an}, \mathbf{V}_{bn}, \mathbf{V}_{cn}$ are voltages between the lines *a*, *b*, and *c*, and the neutral line *n*, respectively.

Balanced phase voltages are equal in magnitude and frequency, and are out of phase with each other by $120°$. This implies that

$$\mathbf{V}_{an} + \mathbf{V}_{bn} + \mathbf{V}_{cn} = 0$$

$$|\mathbf{V}_{an}| = |\mathbf{V}_{bn}| = |\mathbf{V}_{cn}|$$

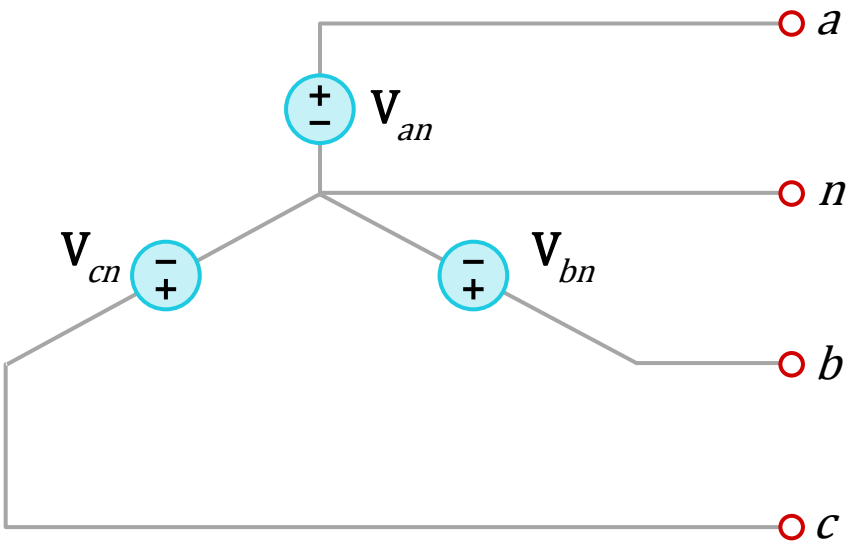

(a) Y-connected

Balanced Three-Phase Voltages

The **phase sequence** is the **time order** in which the voltages pass through their respective maximum values.

Since the three phase voltages are $120°$ out of phase with each other, there are two possible combinations:

1. abc sequence or positive sequence
2. acb sequence or negative sequence

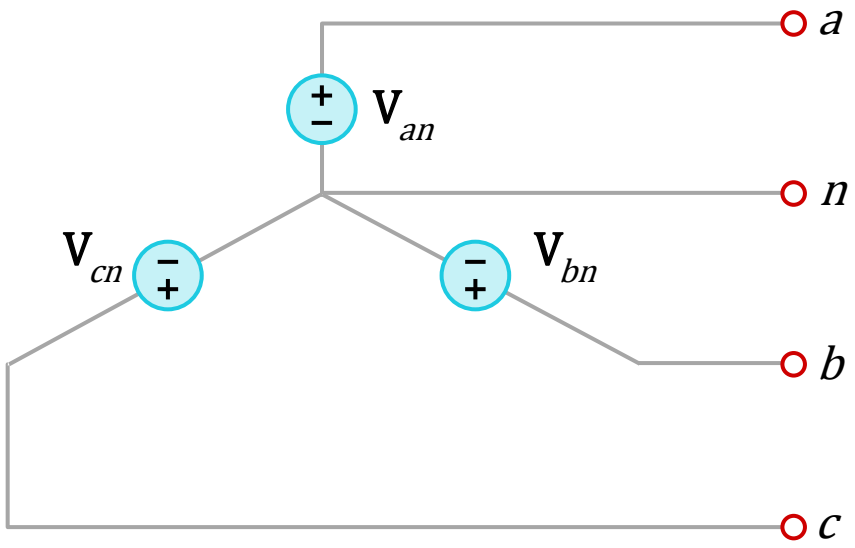

(a) Y-connected

Balanced Three-Phase Voltages

1. abc sequence or positive sequence

$$\mathbf{V}_{an} = V_p \angle 0^o$$

$$\mathbf{V}_{bn} = V_p \angle -120^o$$

$$\mathbf{V}_{cn} = V_p \angle -240^o = V_p \angle +120^o$$

$$\mathbf{V}_{an} + \mathbf{V}_{bn} + \mathbf{V}_{cn} = 0$$

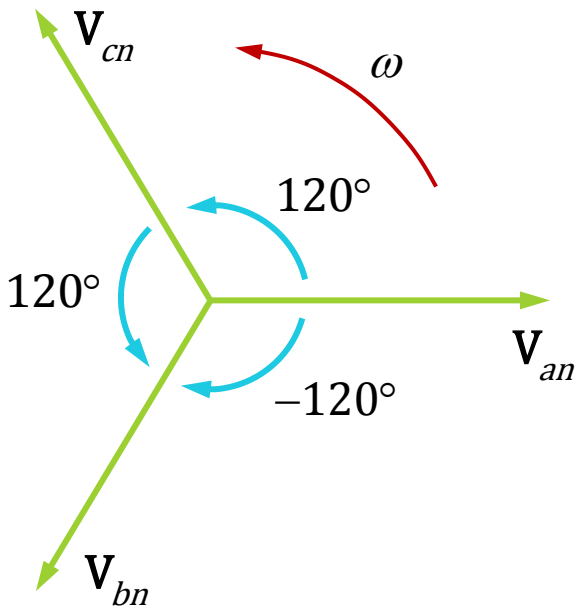

$V_p = rms$ **value of the phase voltages**

The sequence is produced when the rotor rotates counterclockwise.

Balanced Three-Phase Voltages

2. acb sequence or negative sequence

$$\mathbf{V}_{an} = V_p \angle 0^o$$

$$\mathbf{V}_{cn} = V_p \angle -120^o$$

$$\mathbf{V}_{bn} = V_p \angle -240^o = V_p \angle +120^o$$

$$\mathbf{V}_{an} + \mathbf{V}_{cn} + \mathbf{V}_{bn} = 0$$

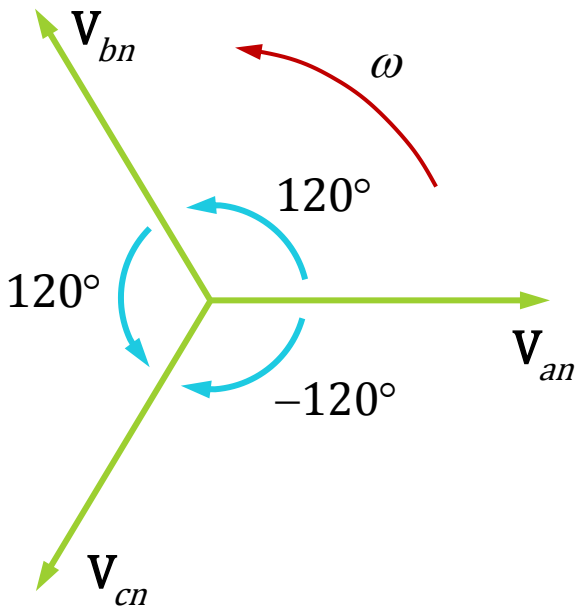

The sequence is produced when the rotor rotates clockwise.

Balanced Three-Phase Voltages: Example 1

Determine the phase sequence of the set of voltages.

$$v_{an} = 200\cos(\omega t + 10°) \qquad v_{cn} = 200\cos(\omega t - 110°)$$

$$v_{bn} = 200\cos(\omega t - 230°)$$

In phasor form as

$$v_{an} = 200\cos(\omega t + 10°) \rightarrow \mathbf{V}_{an} = 200\angle 10^{o}\ \text{V}$$

$$v_{bn} = 200\cos(\omega t - 230°) \rightarrow \mathbf{V}_{bn} = 200\angle -230^{o}\ \text{V}$$

$$v_{cn} = 200\cos(\omega t - 110°) \rightarrow \mathbf{V}_{cn} = 200\angle -110^{o}\ \text{V}$$

Notice that $\mathbf{V}_{an}$ leads $\mathbf{V}_{cn}$ by 120° and $\mathbf{V}_{cn}$ in turn leads $\mathbf{V}_{bn}$ by 120°.

Hence, we have an *acb* sequence.

Balanced Three-Phase Voltages

A **balanced load** is one in which the phase impedances are **equal in magnitude and in phase**.

Balanced Wye-connected Load

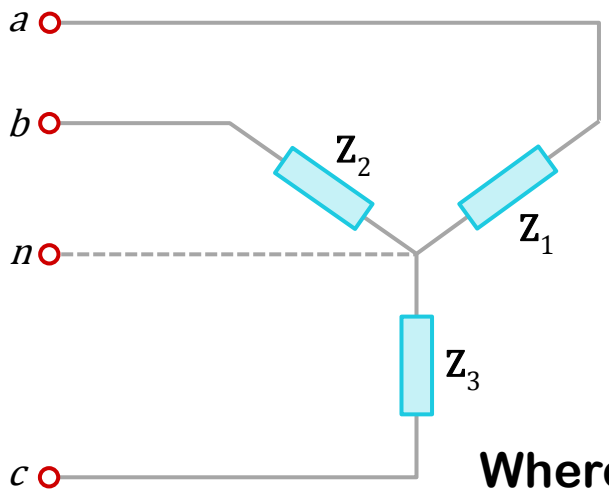

$$\mathbf{Z}_1 = \mathbf{Z}_2 = \mathbf{Z}_3 = \mathbf{Z}_Y$$

Where $\mathbf{Z}_y$ is the load impedance per phase

Balanced Delta-connected Load

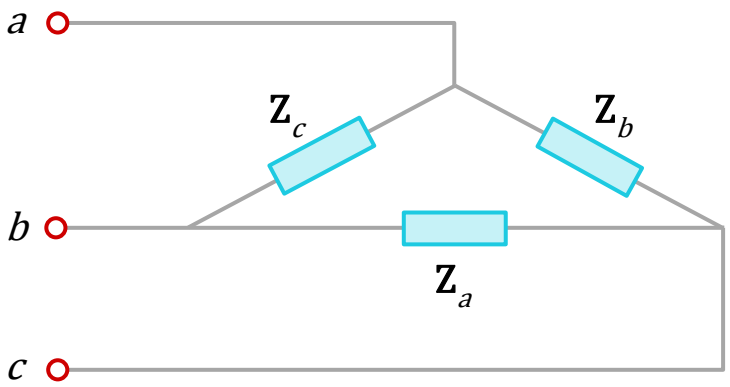

$$\mathbf{Z}_a = \mathbf{Z}_b = \mathbf{Z}_c = \mathbf{Z}_\Delta$$

Where $\mathbf{Z}_\Delta$ is the load impedance per phase

Balanced Three-Phase Voltages

Balanced Wye-connected Load

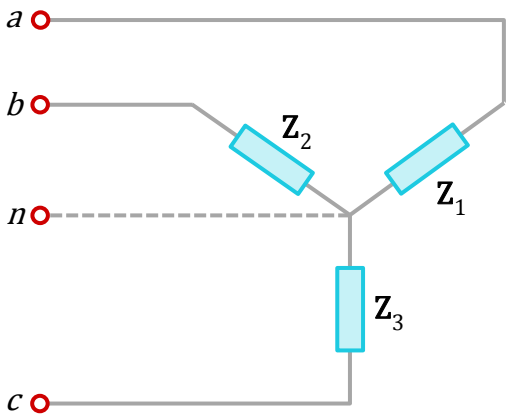

Balanced Delta-connected Load

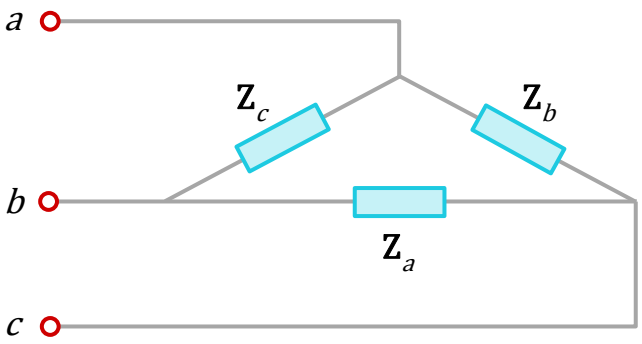

Y-Δ or Δ-Y transformation:

$$\mathbf{Z}_{\Delta} = 3\mathbf{Z}_{Y}$$

or

$$\mathbf{Z}_{Y} = \frac{1}{3}\mathbf{Z}_{\Delta}$$

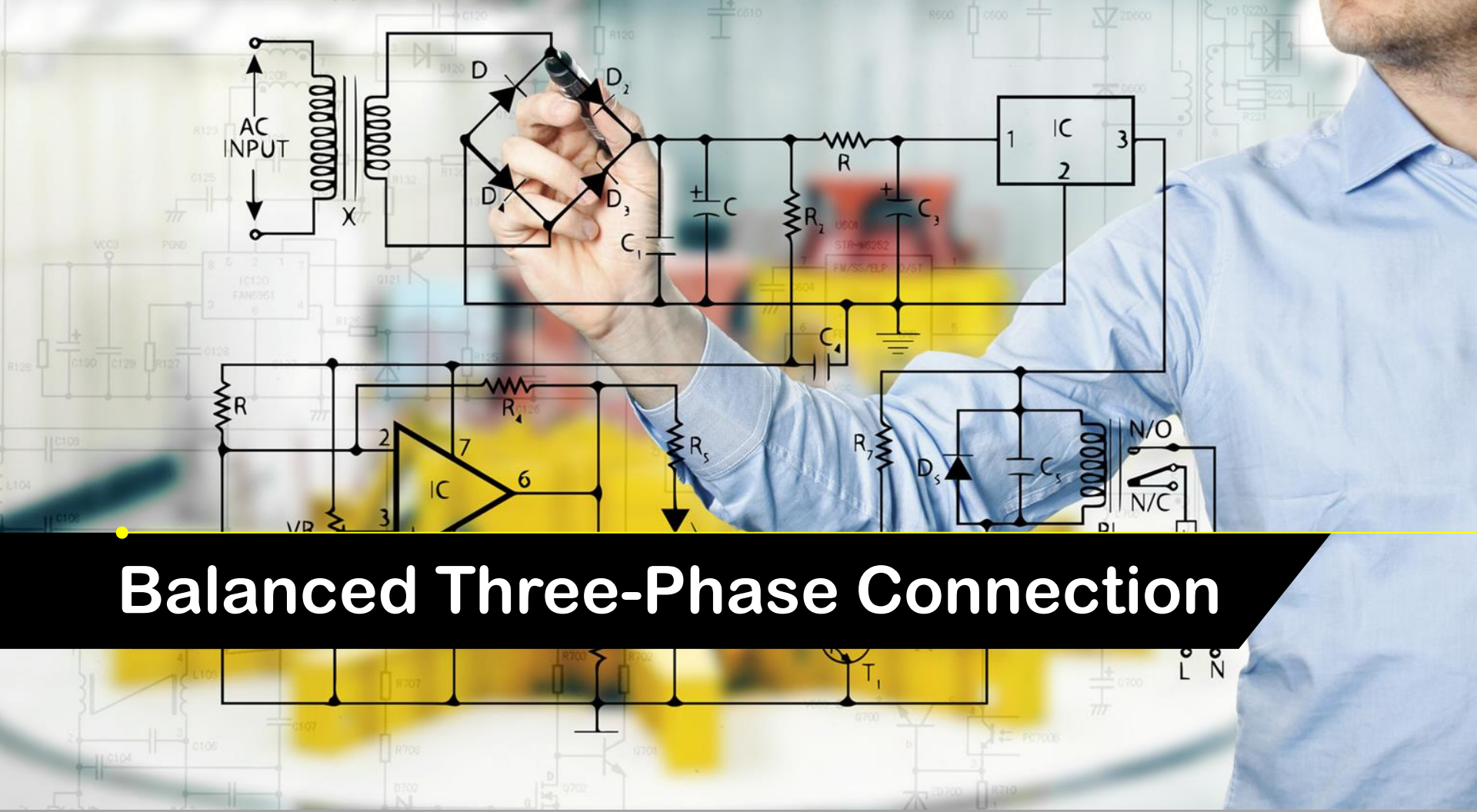

Balanced Three-Phase Connection

Balanced Three-Phase Connection

Balanced Wye-connected Load

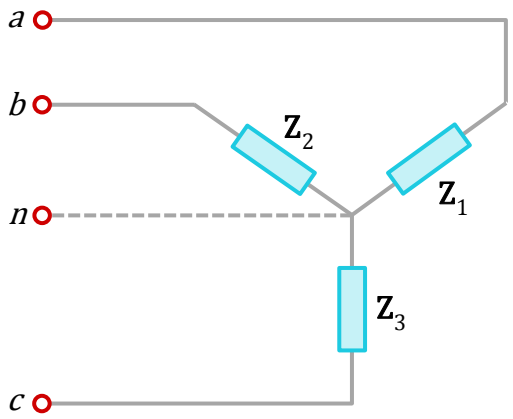

Balanced Delta-connected Load

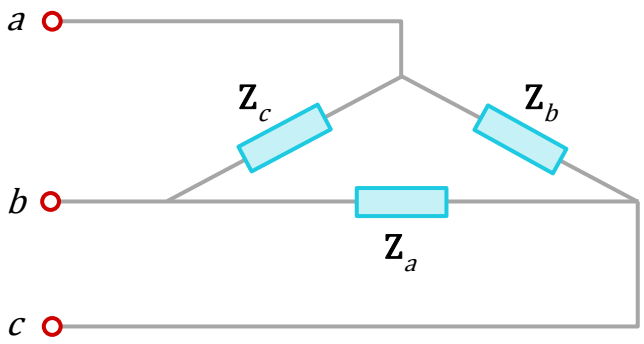

Since both the three-phase sources and loads can be either Y- or Δ-connected, there are 4 possible connections:

1. **Y-Y connection (Y-connected source with a Y-connected load)**
2. **Y-Δ connection (Y-connected source with a Δ-connected load)**
3. **Δ-Δ connection**
4. **Δ-Y connection**

Balanced Three-Phase Connection: Y-Y

1. Balanced Y-Y System

A **BALANCED Y-Y** system is a three-phase system with a balanced Y-connected source and a balanced Y-connected load.

Z_S - Source impedance

Z_l - Line impedance

Z_L - Load impedance

Z_n - Neutral line impedance

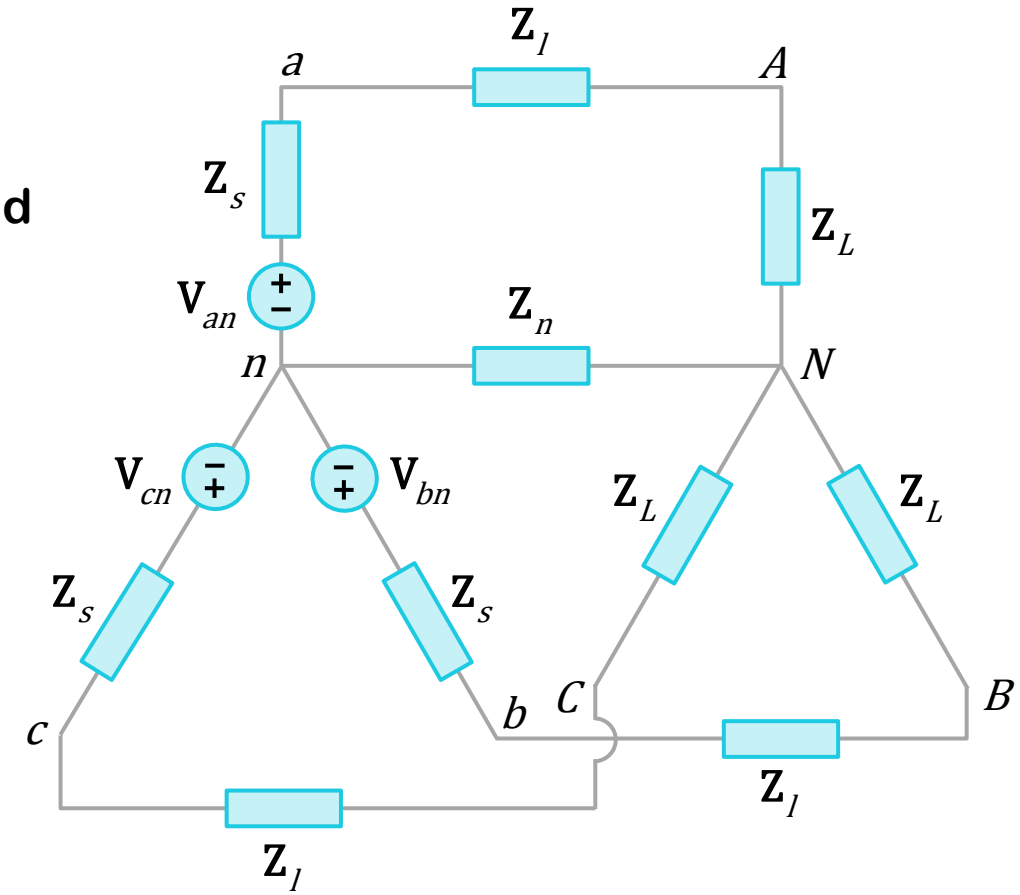

Balanced Three-Phase Connection: Y-Y

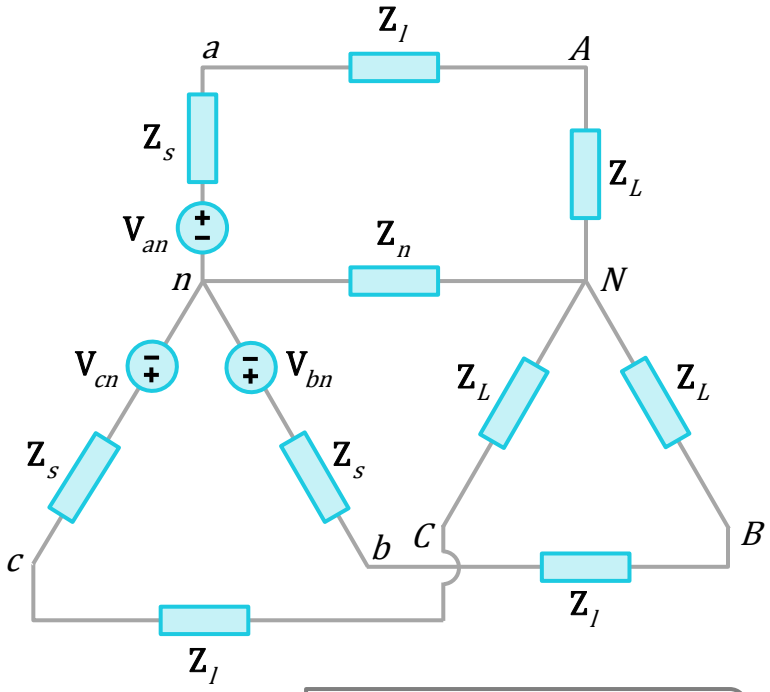

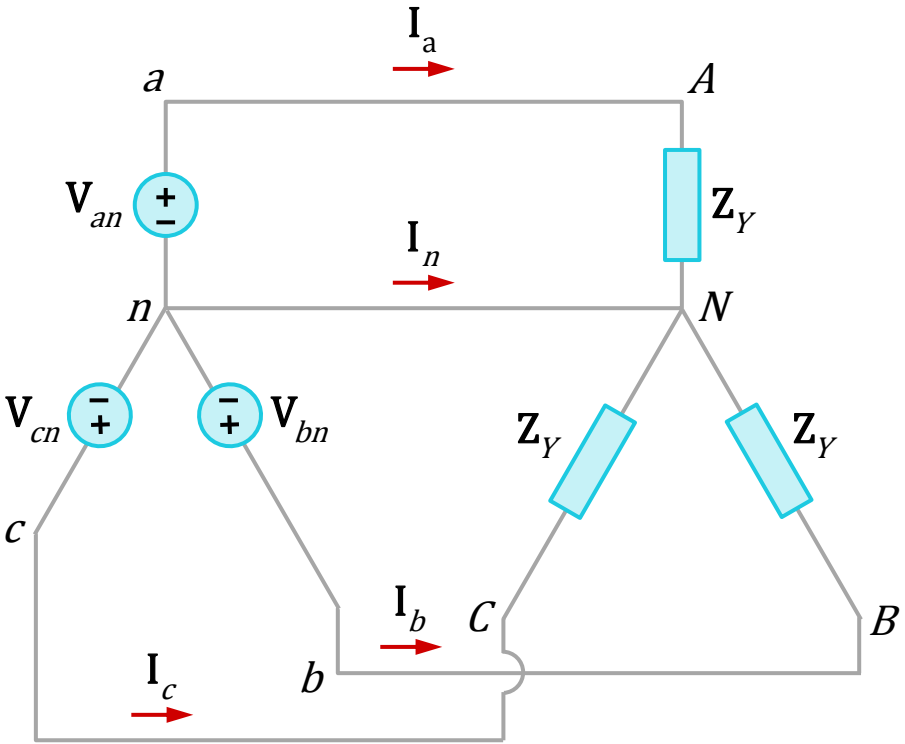

In general $Z_Y = Z_s + Z_l + Z_L$

$Z_Y \approx Z_L$ if $|Z_L| \gg |Z_l|$ and $|Z_L| \gg |Z_S|$

Balanced Three-Phase Connection: Y-Y

Assume positive sequence

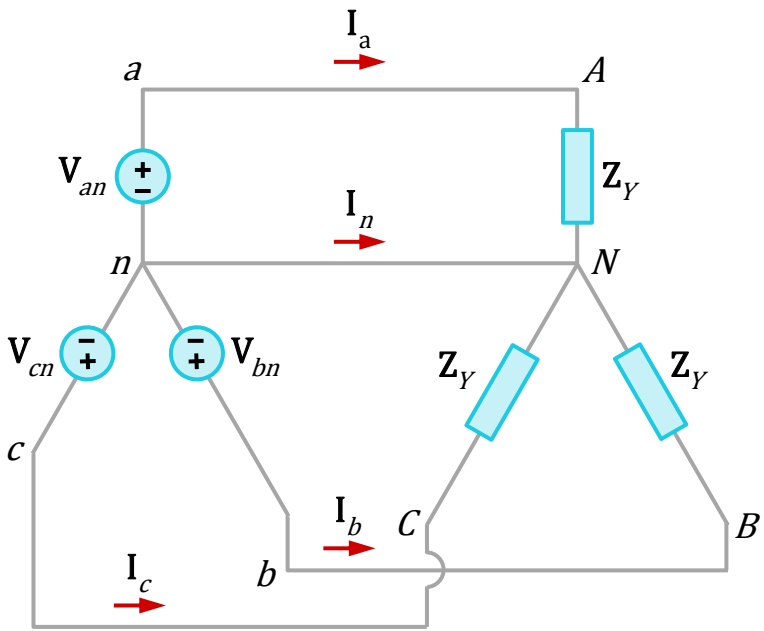

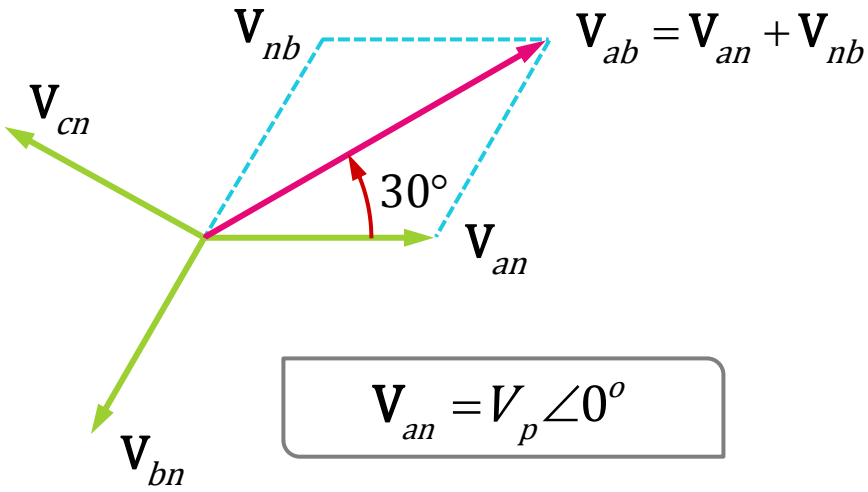

$$\mathbf{V}_{an} = V_p \angle 0^o$$

$$\mathbf{V}_{bn} = V_p \angle -120^o$$

$$\mathbf{V}_{cn} = V_p \angle -240^o = V_p \angle +120^o$$

Balanced Three-Phase Connection: Y-Y

Line-to-line voltages

$$\mathbf{V}_{ab} = \mathbf{V}_{an} + \mathbf{V}_{nb} = \mathbf{V}_{an} - \mathbf{V}_{bn} = V_p\angle 0^o - V_p\angle -120^o = \sqrt{3}V_p\angle 30^o$$

$$\mathbf{V}_{bc} = \mathbf{V}_{bn} - \mathbf{V}_{cn} = \sqrt{3}V_p\angle -90^o$$

$$\mathbf{V}_{ca} = \mathbf{V}_{cn} - \mathbf{V}_{an} = \sqrt{3}V_p\angle -210^o$$

$$V_L = \sqrt{3}V_p$$

Where

$$V_p = |\mathbf{V}_{an}| = |\mathbf{V}_{bn}| = |\mathbf{V}_{cn}|$$

$$V_L = |\mathbf{V}_{ab}| = |\mathbf{V}_{bc}| = |\mathbf{V}_{ca}|$$

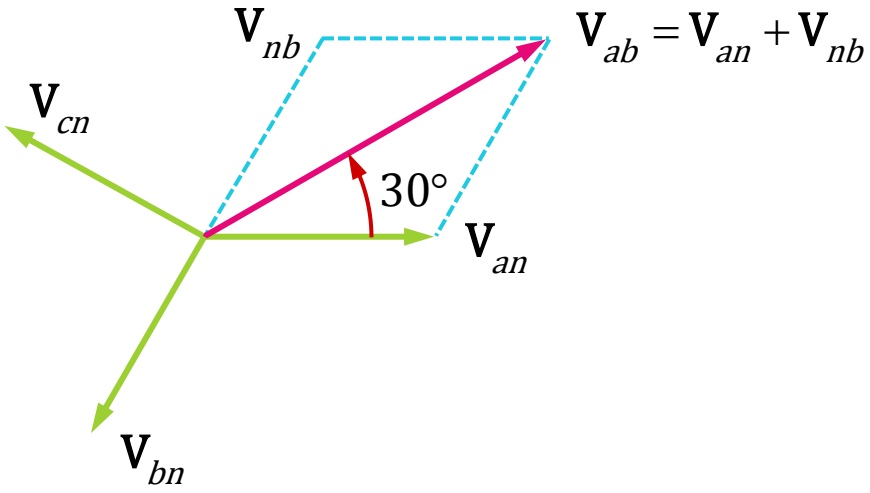

Balanced Three-Phase Connection: Y-Y

Relationships between line voltages and phase voltages.

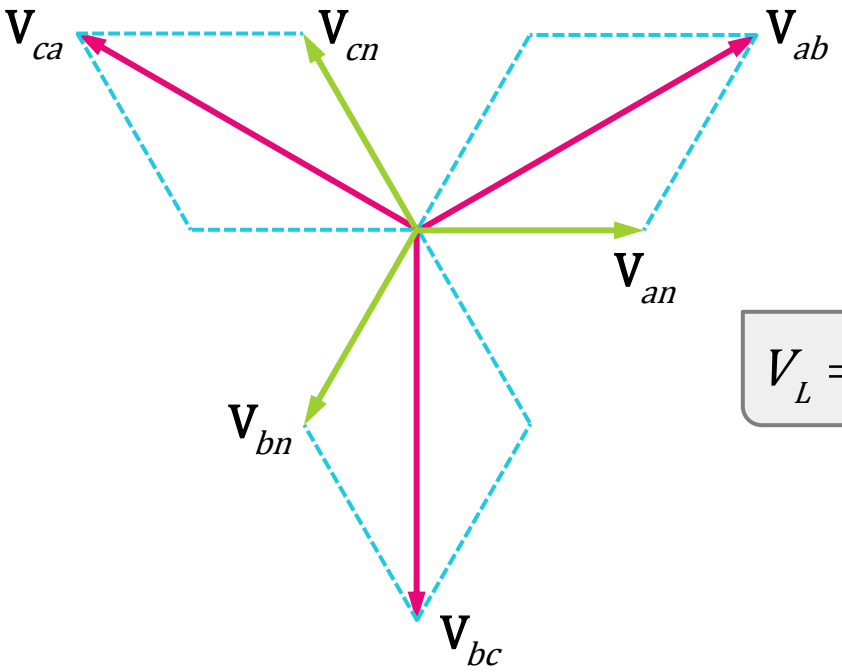

$$V_L = \sqrt{3}V_p$$

The line voltages lead the corresponding phase voltages by $30°$.

Balanced Three-Phase Connection: Y-Y

Applying KCL to each phase in the **BALANCED Y-Y** system

$$\mathbf{I}_a = \frac{\mathbf{V}_{an}}{\mathbf{Z}_Y}$$

$$\mathbf{I}_b = \frac{\mathbf{V}_{bn}}{\mathbf{Z}_Y} = \frac{\mathbf{V}_{an}\angle -120^o}{\mathbf{Z}_Y} = \mathbf{I}_a\angle -120^o$$

$$\mathbf{I}_c = \frac{\mathbf{V}_{cn}}{\mathbf{Z}_Y} = \frac{\mathbf{V}_{an}\angle -240^o}{\mathbf{Z}_Y} = \mathbf{I}_a\angle -240^o$$

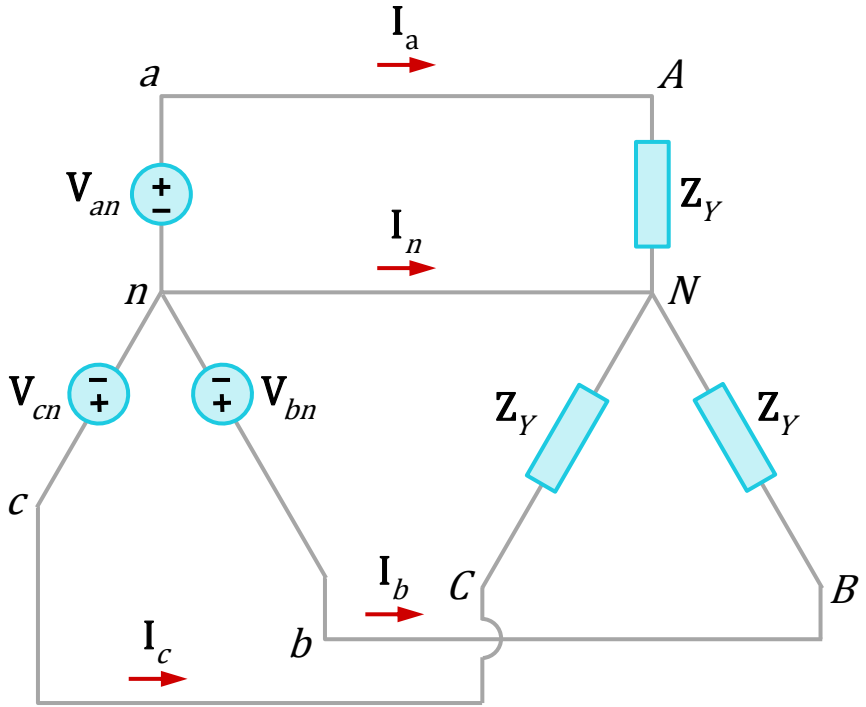

Balanced Three-Phase Connection: Y-Y

$$\mathbf{I}_a = \frac{\mathbf{V}_{an}}{\mathbf{Z}_Y}$$

$$\mathbf{I}_b = \frac{\mathbf{V}_{bn}}{\mathbf{Z}_Y} = \frac{\mathbf{V}_{an}\angle -120^o}{\mathbf{Z}_Y} = \mathbf{I}_a\angle -120^o$$

$$\mathbf{I}_c = \frac{\mathbf{V}_{cn}}{\mathbf{Z}_Y} = \frac{\mathbf{V}_{an}\angle -240^o}{\mathbf{Z}_Y} = \mathbf{I}_a\angle -240^o$$

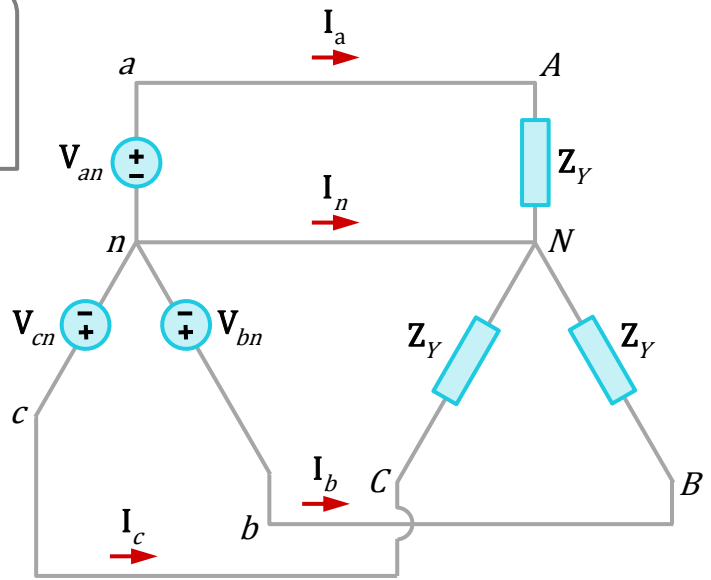

Hence,

$$\mathbf{I}_a + \mathbf{I}_b + \mathbf{I}_c = 0 \rightarrow \mathbf{I}_n = 0 \rightarrow \mathbf{V}_{nN} = \mathbf{Z}_n\mathbf{I}_n = 0$$

For the BALANCED Y-Y system, the voltage across the neutral wire is zero.

Balanced Three-Phase Connection: Y-Y

An alternative way to analyse the **BALANCED Y-Y** system, is to do so on "per phase" basis.

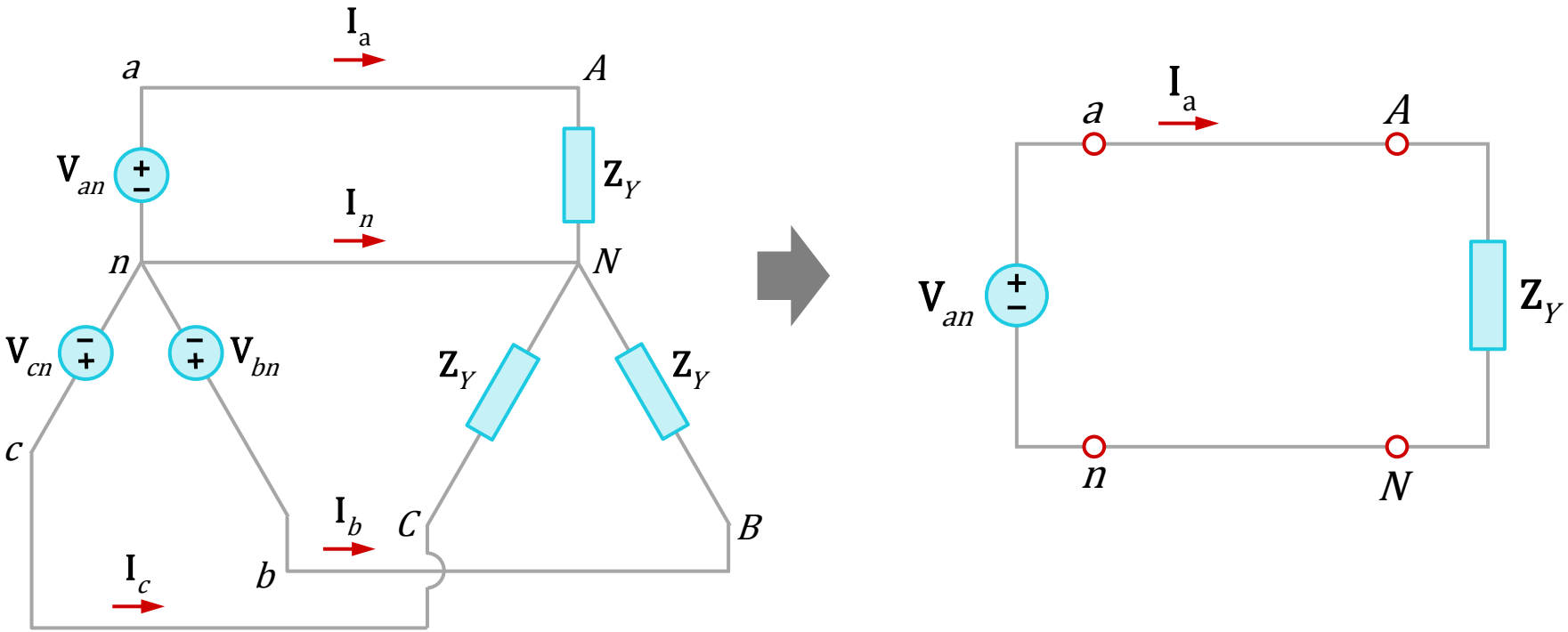

Balanced Three-Phase Connection: Y-Y

$$\mathbf{I}_a = \frac{\mathbf{V}_{an}}{\mathbf{Z}_Y}$$

We can then use the phase sequence to obtain other line currents.

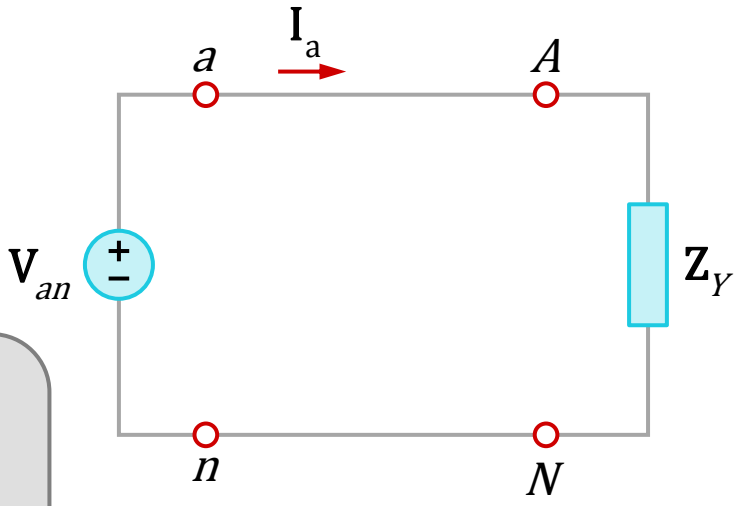

- As long as the system is **BALANCED Y-Y**, we need only analyse one phase.
- We may do this even if the neutral line is absent, as in the three-wire system.

Balanced Three-Phase Connection: Y-Y

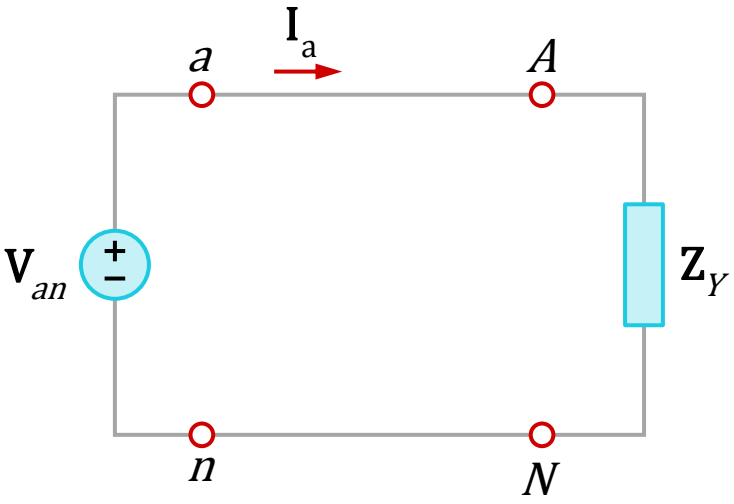

Balanced Three-Phase Connection: Y-Δ

2. Balanced Y-Δ System

A **BALANCED Y-Δ** system is a three-phase system with a balanced Y-connected source and a balanced Δ-connected load.

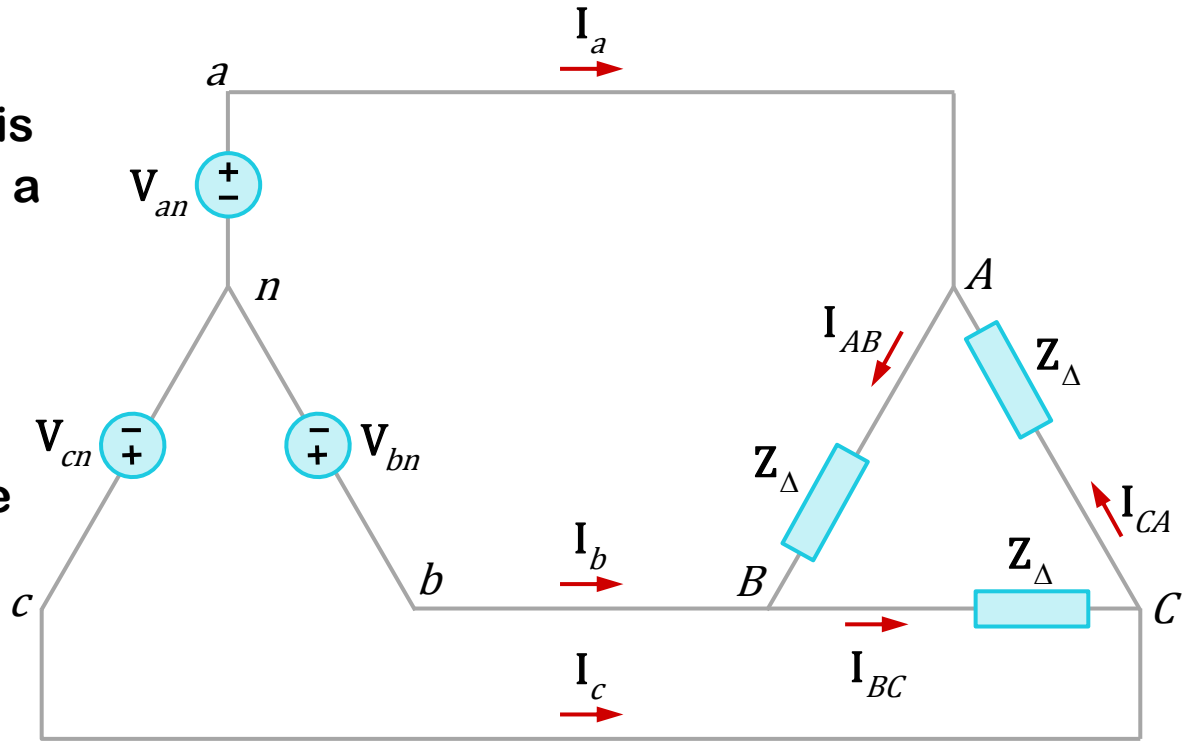

Assume positive sequence

$$\mathbf{V}_{an} = V_p \angle 0^o$$

$$\mathbf{V}_{bn} = V_p \angle -120^o$$

$$\mathbf{V}_{cn} = V_p \angle -240^o = V_p \angle +120^o$$

Balanced Three-Phase Connection: Y-Δ

Phase voltages

$$\mathbf{V}_{ab} = \sqrt{3}V_p\angle 30^o = \mathbf{V}_{AB}$$

$$\mathbf{V}_{bc} = \sqrt{3}V_p\angle -90^o = \mathbf{V}_{BC}$$

$$\mathbf{V}_{ca} = \sqrt{3}V_p\angle -210^o = \mathbf{V}_{CA}$$

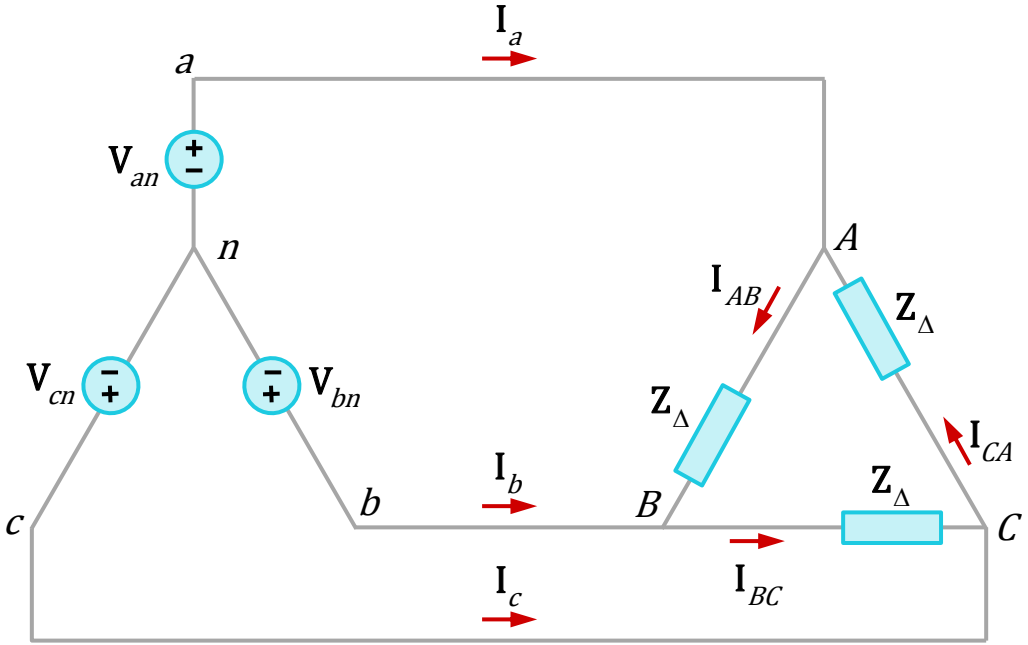

Phase currents

$$\mathbf{I}_{AB} = \frac{\mathbf{V}_{AB}}{\mathbf{Z}_\Delta} \qquad \mathbf{I}_{BC} = \frac{\mathbf{V}_{BC}}{\mathbf{Z}_\Delta} \qquad \mathbf{I}_{CA} = \frac{\mathbf{V}_{CA}}{\mathbf{Z}_\Delta}$$

Balanced Three-Phase Connection: Y-Δ

Relationship between line currents and phase currents of a balanced Δ-connected load.

Take KCL at nodes A, B and C

$$\mathbf{I}_a = \mathbf{I}_{AB} - \mathbf{I}_{CA}$$

$$\mathbf{I}_b = \mathbf{I}_{BC} - \mathbf{I}_{AB}$$

$$\mathbf{I}_c = \mathbf{I}_{CA} - \mathbf{I}_{BC}$$

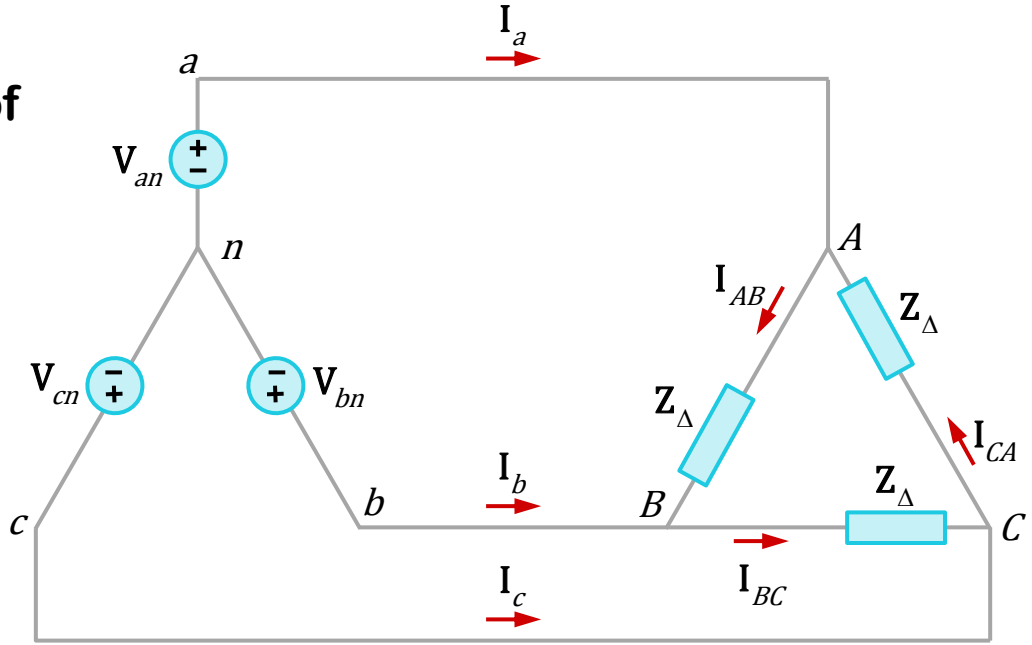

Since $\mathbf{I}_{CA} = \mathbf{I}_{AB}\angle -240^o$, $\mathbf{I}_a = \mathbf{I}_{AB} - \mathbf{I}_{CA} = \mathbf{I}_{AB}\sqrt{3}\angle -30^o$

Balanced Three-Phase Connection: Y-Δ

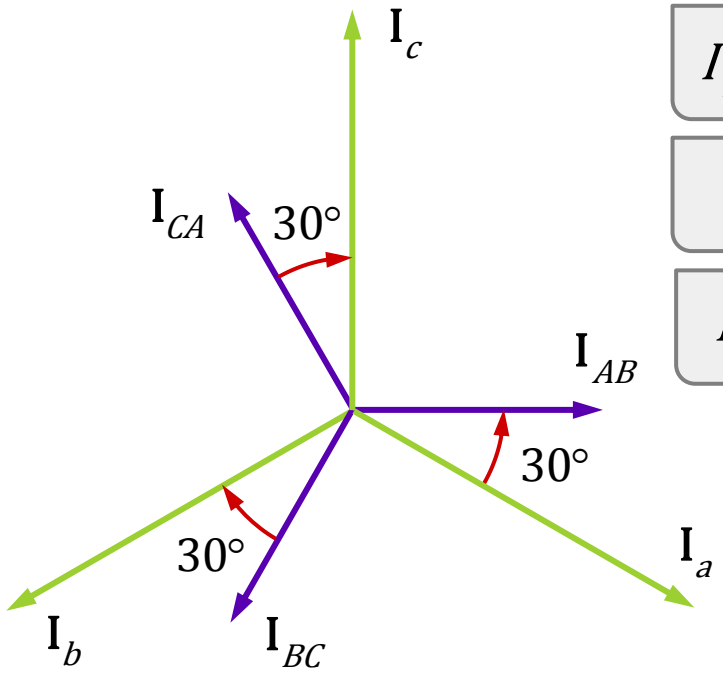

$$I_L = \sqrt{3} I_p$$

Where

$$I_L = |\mathbf{I}_a| = |\mathbf{I}_b| = |\mathbf{I}_c|$$

$$I_p = |\mathbf{I}_{AB}| = |\mathbf{I}_{BC}| = |\mathbf{I}_{CA}|$$

The line currents lag the corresponding phase currents by $30°$.

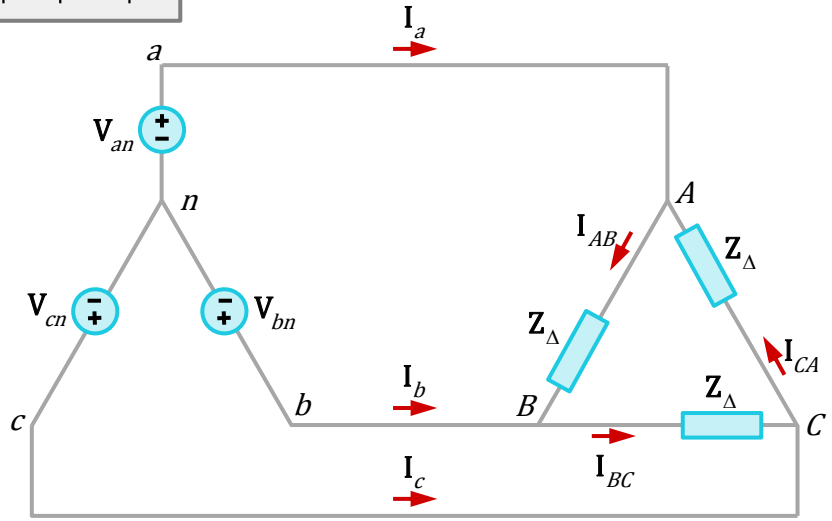

Balanced Three-Phase Connection: Y-Δ

An alternative way of analysing a **BALANCED Y-Δ** system is to transform the **Δ**-connected load to an equivalent **Y**-connected load.

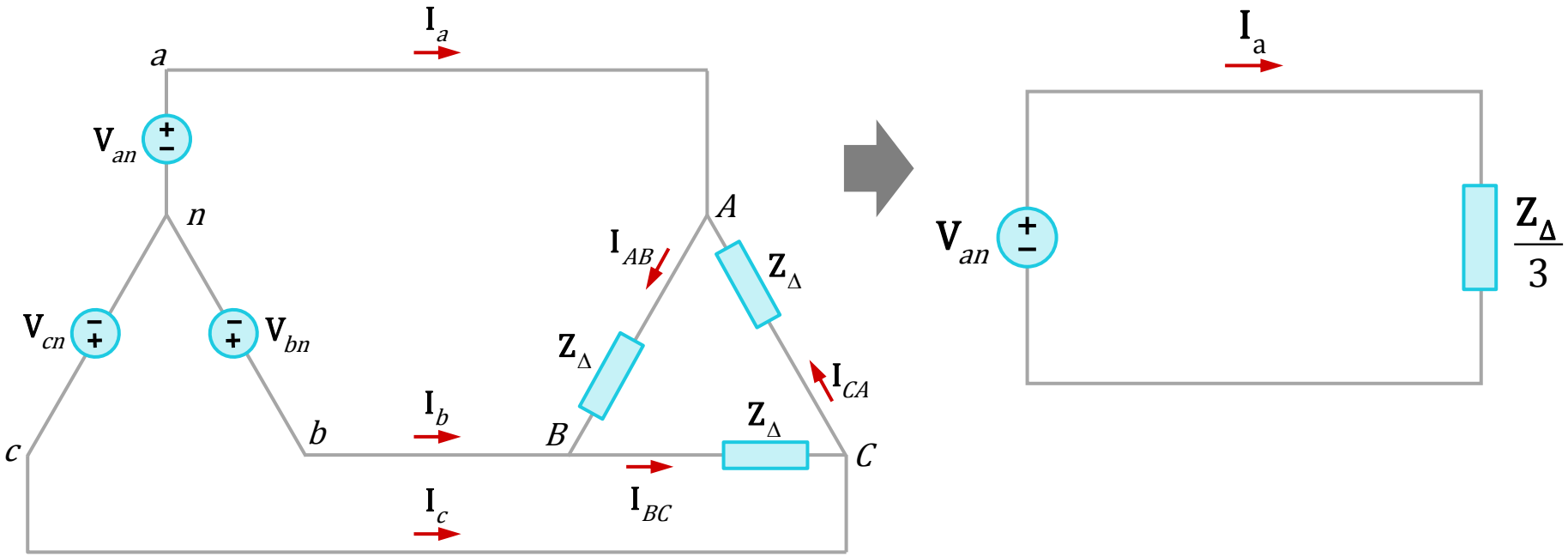

Balanced Three-Phase Connection: Y-Δ

We then have an equivalent Y-Y system and can analyse the system on a ”per phase” basis as before.

$$\boxed{Z_Y = \frac{Z_\Delta}{3}}$$

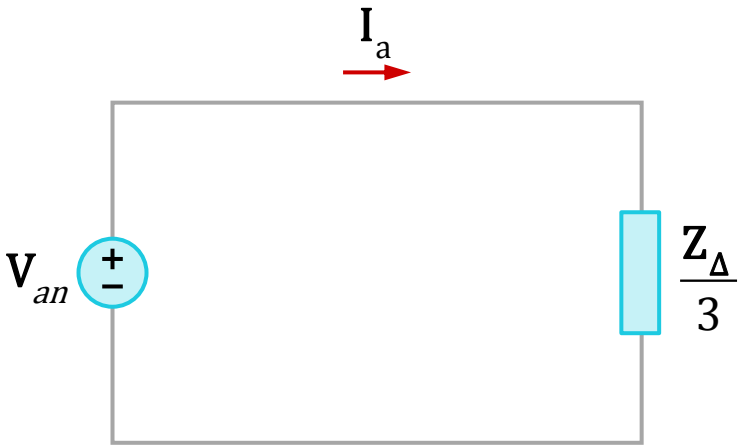

Balanced Three-Phase Connection: Example 1

A balanced *abc* -sequence Y-connected source with $\mathbf{V}_{an} = 100\angle 10°$ is connected to a Δ-connected load $(8+j4)\ \Omega$ per phase. Calculate the phase and line currents.

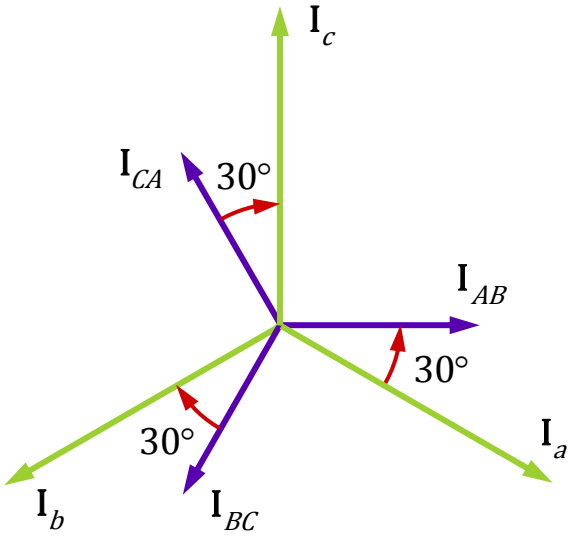

Using single-phase analysis

$$\mathbf{I}_a = \frac{\mathbf{V}_{an}}{\mathbf{Z}_\Delta / 3} = \frac{100\angle 10°}{2.981\angle 26.57°} = 33.54\angle -16.57°\ \text{A}$$

$$\mathbf{I}_a = \mathbf{I}_{AB}\sqrt{3}\angle -30^o \Rightarrow \mathbf{I}_{AB} = 19.36\angle 13.43^o\ \text{A}$$

Balanced Three-Phase Connection: Example 1

$$\mathbf{I}_a = 33.54\angle -16.57^o \text{ A}$$

$$\mathbf{I}_{AB} = 19.36\angle 13.43^o \text{ A}$$

Hence,

$$\mathbf{I}_b = \mathbf{I}_a\angle -120^o = 33.54\angle -136.57^o \text{ A}$$

$$\mathbf{I}_c = \mathbf{I}_a\angle +120^o = 33.54\angle 103.43^o \text{ A}$$

$$\mathbf{I}_{BC} = \mathbf{I}_{AB}\angle -120^o = 19.36\angle -106.57^o \text{ A}$$

$$\mathbf{I}_{CA} = \mathbf{I}_{AB}\angle +120^o = 19.36\angle 133.43^o \text{ A}$$

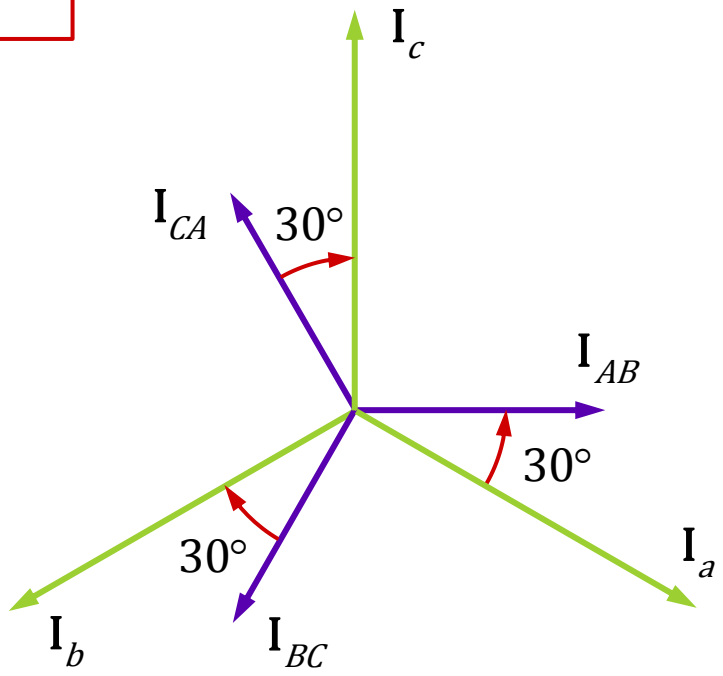

Balanced Three-Phase Connection: Example 2

A balanced 3 phase Y-connected generator with positive sequence has an impedance of $(0.2+j0.5)\ \Omega$ per phase and an internal voltage of $120\ \mathrm{V}$ per phase. The generator feeds a Δ-connected load through a distribution line having an impedance of $(0.3+j0.9)\ \Omega$ per phase. The load impedance is $(118.5+j85.8)\ \Omega$ per phase.

a) Construct a single-phase equivalent circuit of the 3 phase system.

b) Calculate the line currents.

c) Calculate the phase voltages at the load terminals.

d) Calculate the phase currents of the load.

e) Calculate the line voltages at the source terminals.

Balanced Three-Phase Connection: Example 2

A balanced 3 phase Y-connected generator with positive sequence has an impedance of $(0.2+j0.5)\ \Omega$ per phase and an internal voltage of $120\ \text{V}$ per phase.

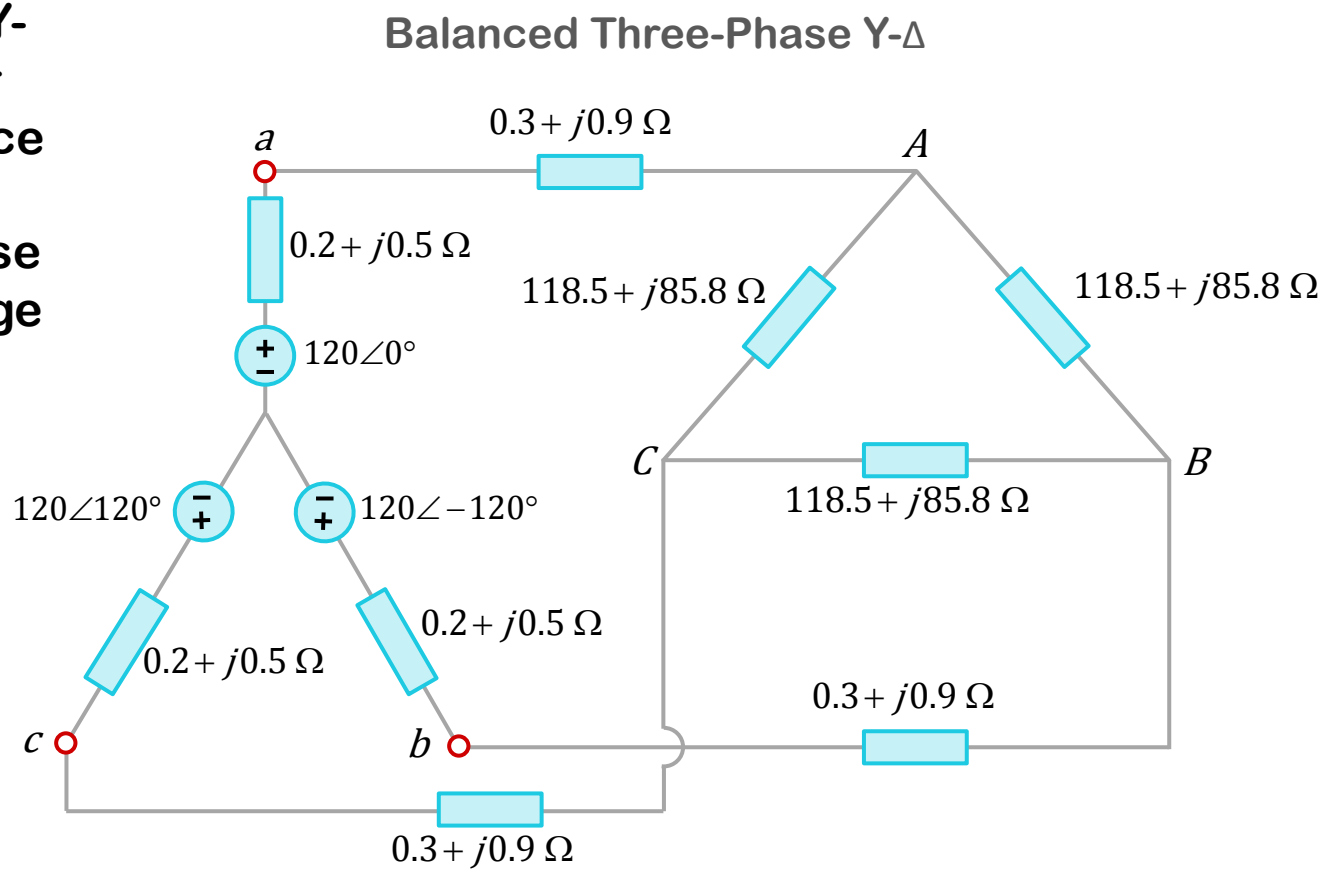

Balanced Three-Phase Connection: Example 2

The generator feeds a Δ-connected load through a distribution line having an impedance of $(0.3+j0.9)\ \Omega$ per phase.

The load impedance is $(118.5+j85.8)\ \Omega$ per phase.

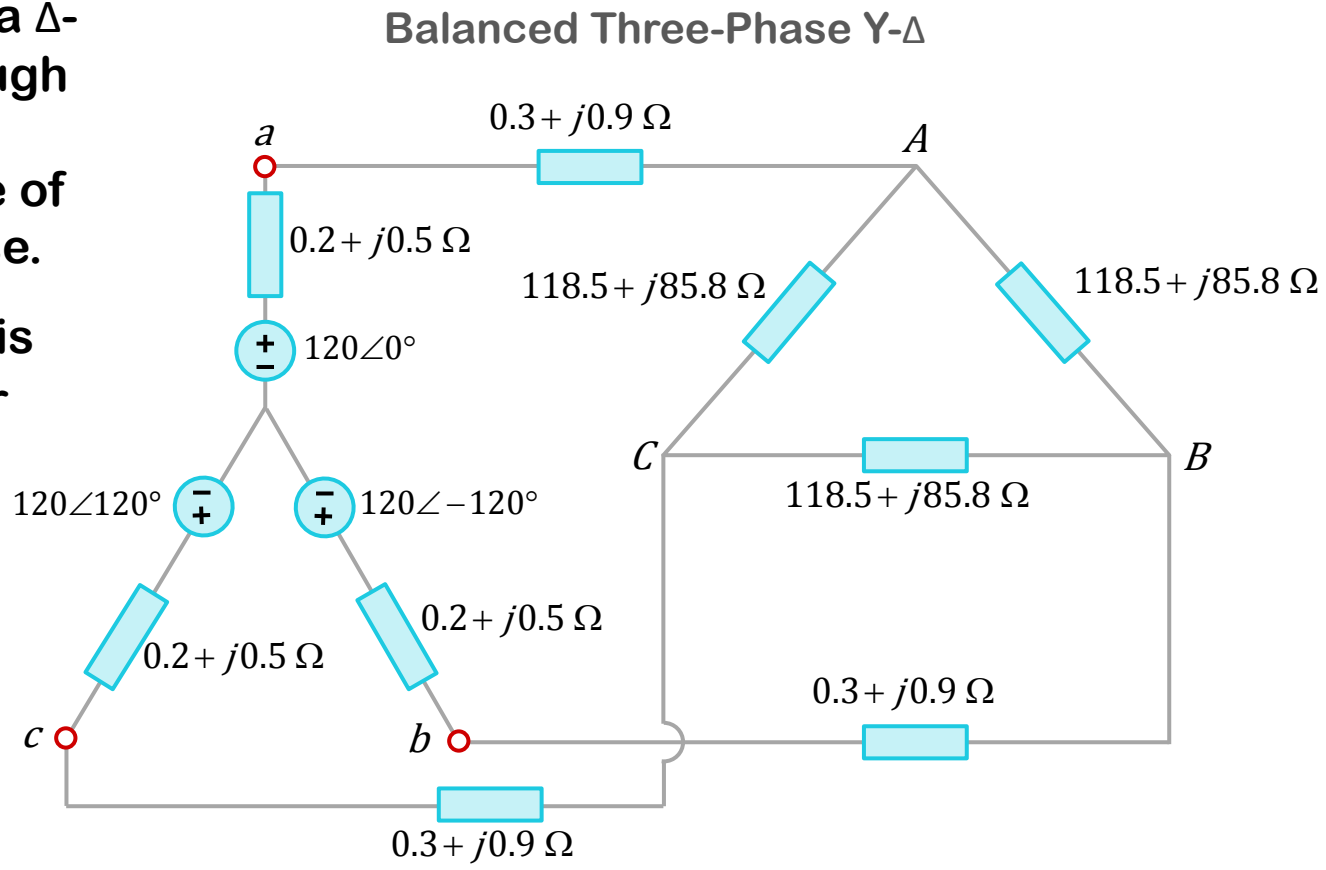

Balanced Three-Phase Connection: Example 2

a) Construct a single-phase equivalent circuit of the 3 phase system.

Using

$$\mathbf{Z}_Y = \frac{\mathbf{Z}_\Delta}{3}$$

$$\mathbf{Z}_Y = \frac{118.5 + j85.8}{3}$$

$$\mathbf{Z}_Y = 39.5 + j28.6\ \Omega$$

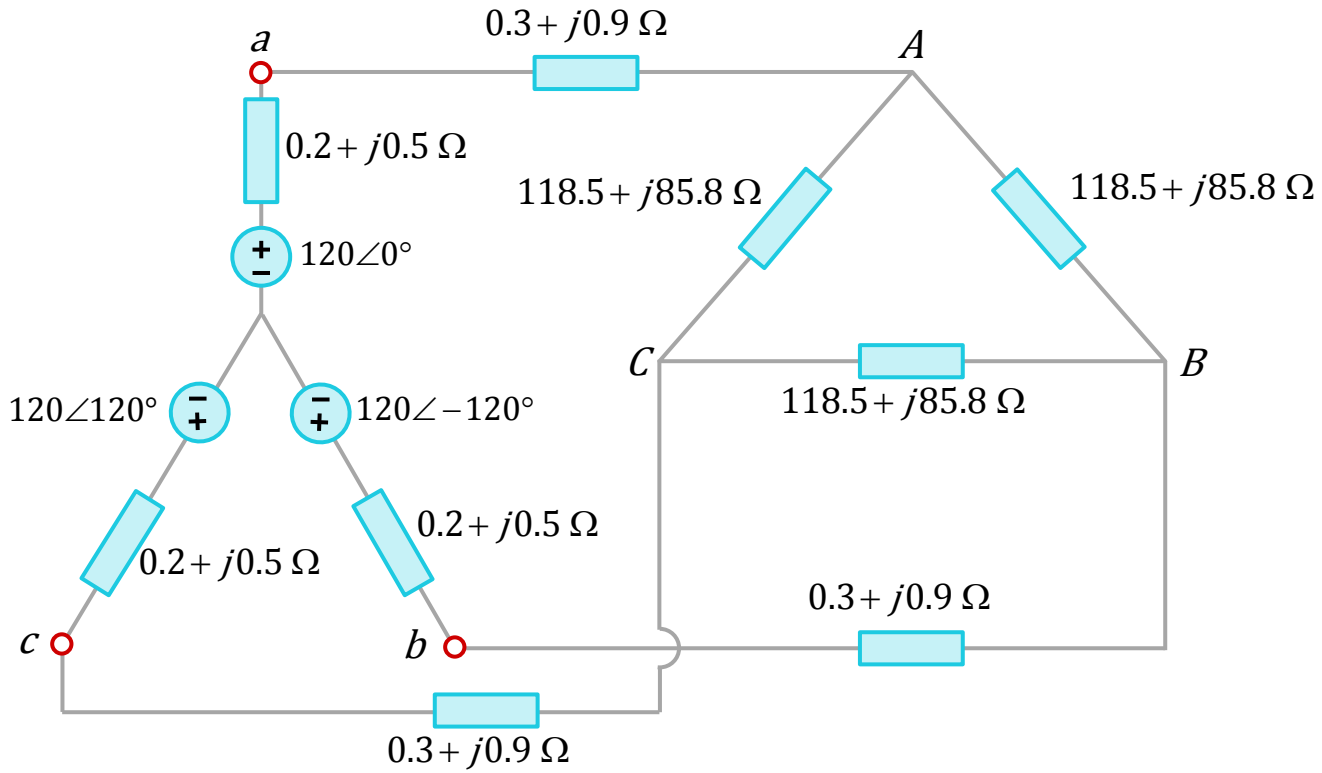

Balanced Three-Phase Connection: Example 2

a) Construct a single-phase equivalent circuit of the 3 phase system.

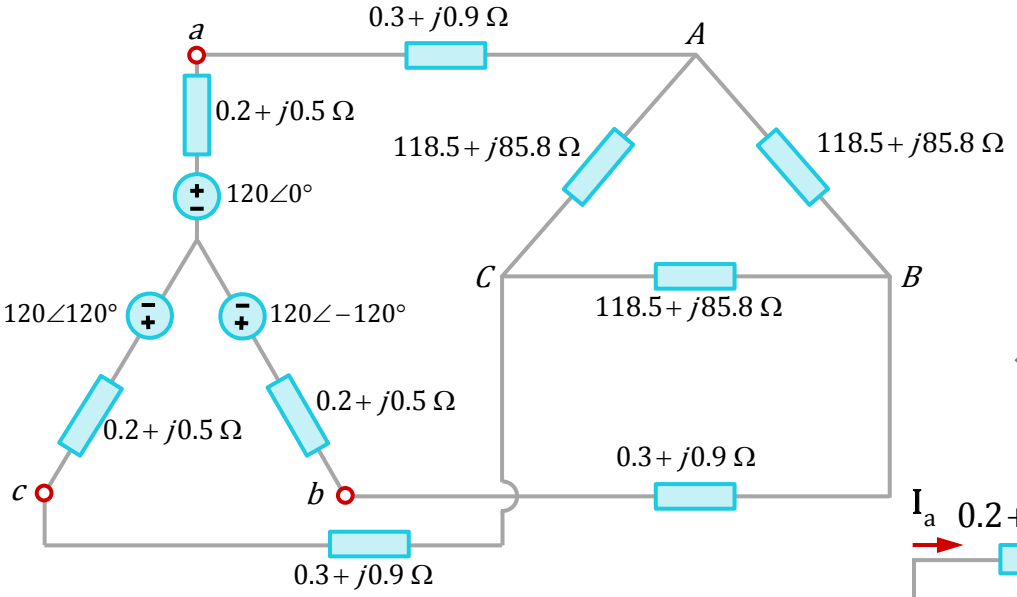

$$\mathbf{Z}_Y = 39.5 + j28.6\ \Omega$$

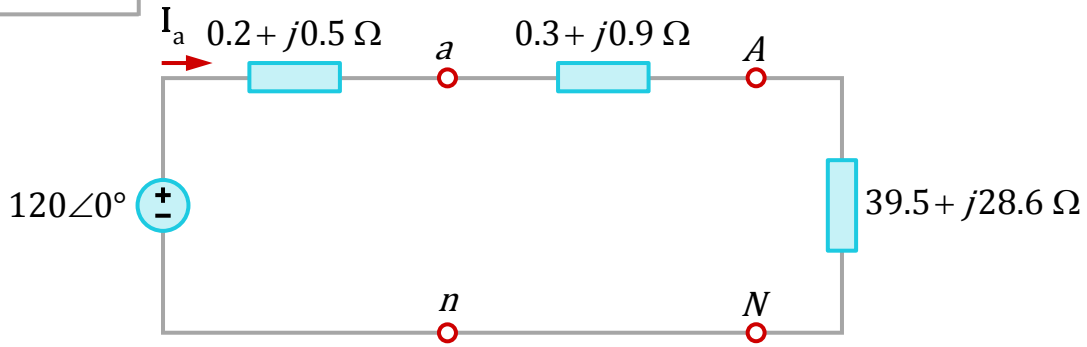

Balanced Three-Phase Connection: Example 2

b) Calculate the line currents.

$$\mathbf{I}_a = \frac{120\angle 0^\circ}{(0.2+0.3+39.5)+j(0.5+0.9+28.6)}$$

$$\mathbf{I}_a = \frac{120\angle 0^\circ}{40+j30}$$

$$\mathbf{I}_a = \frac{120\angle 0^\circ}{50\angle 36.87^\circ}$$

$$\mathbf{I}_a = 2.4\angle -36.87^\circ \text{ A}$$

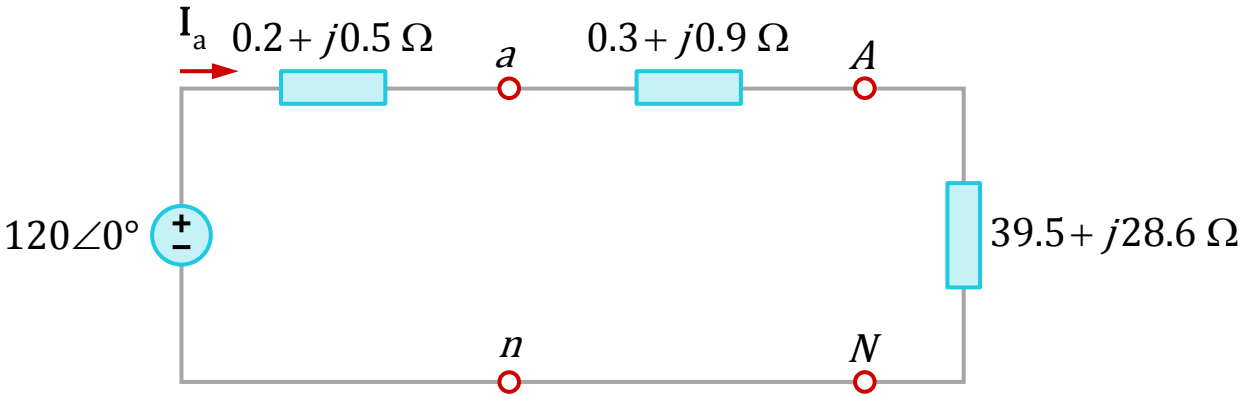

Balanced Three-Phase Connection: Example 2

b) Calculate the line currents.

$$\mathbf{I}_a = 2.4\angle -36.87^\circ \text{ A}$$

$$\mathbf{I}_b = 2.4\angle -36.87^\circ - 120^\circ$$

$$\mathbf{I}_b = 2.4\angle -156.87^\circ \text{ A}$$

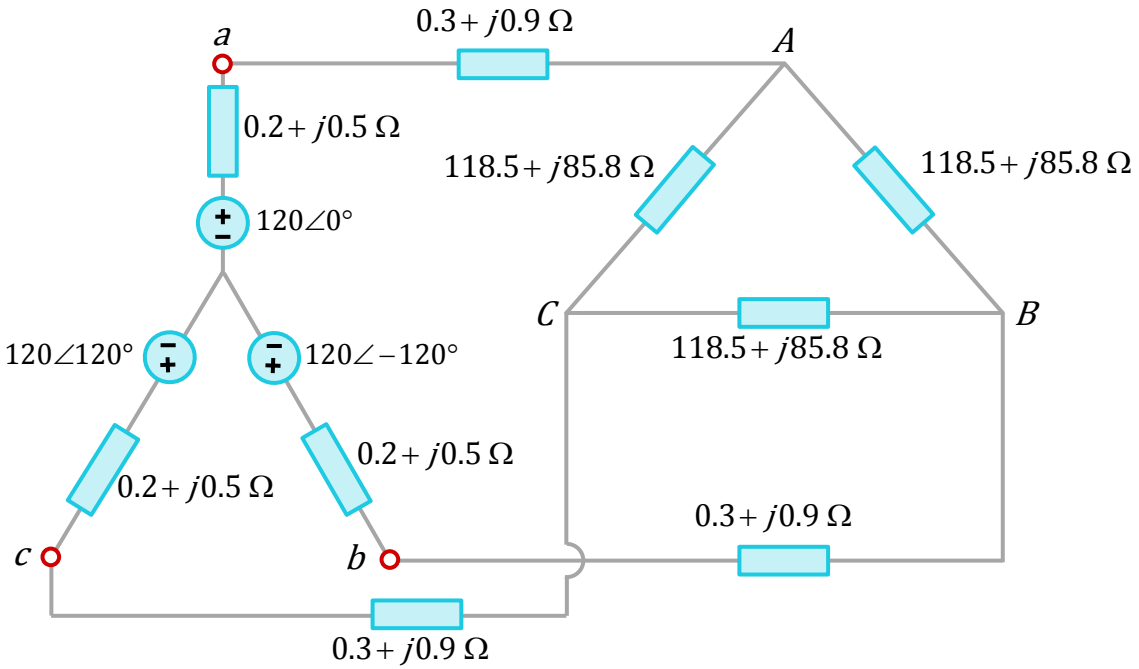

Balanced Three-Phase Connection: Example 2

b) Calculate the line currents.

$$\mathbf{I}_a = 2.4\angle -36.87^\circ \text{ A}$$

$$\mathbf{I}_c = 2.4\angle -36.87^\circ + 120^\circ$$

$$\mathbf{I}_c = 2.4\angle 83.13^\circ \text{ A}$$

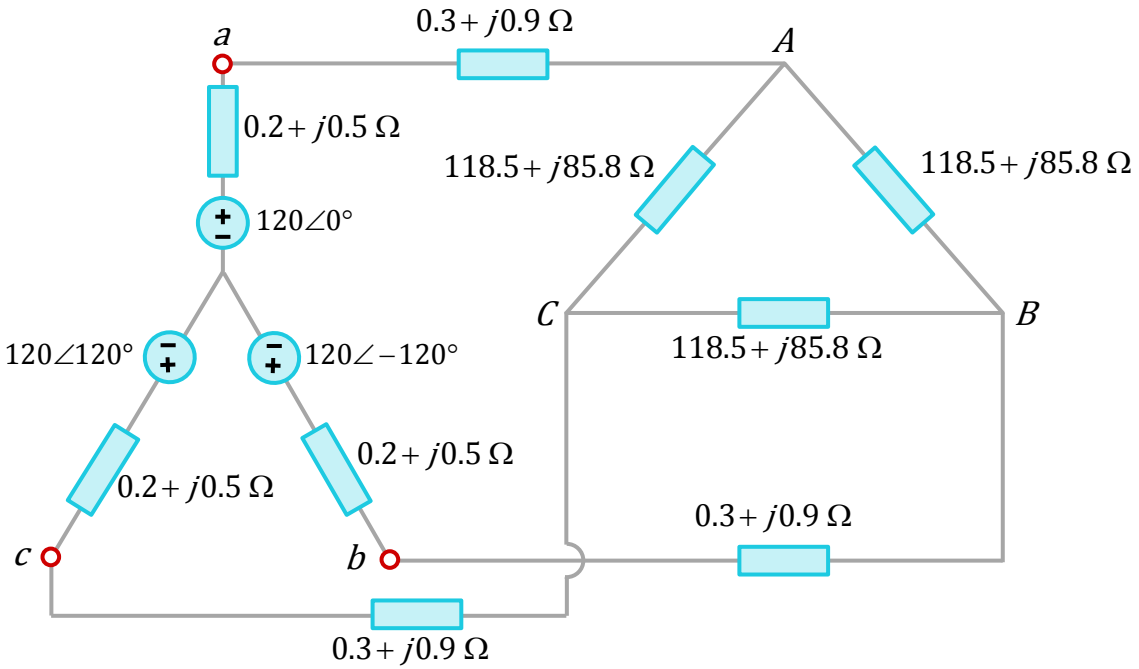

Balanced Three-Phase Connection: Example 2

c) Calculate the phase voltages at the load terminals.

$$\mathbf{V}_{An} = \frac{(39.5 + j28.6)(120\angle 0°)}{(40 + j30)}$$

$$\mathbf{V}_{An} = \frac{(48.767\angle 35.91°)(120\angle 0°)}{(50\angle 36.87°)}$$

$$\mathbf{V}_{An} = 117.04\angle -0.96° \text{ V}$$

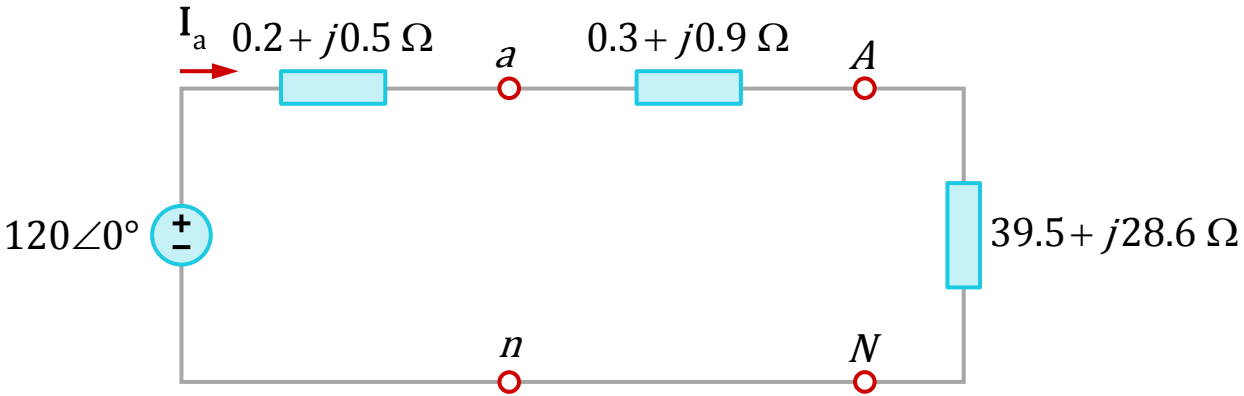

Balanced Three-Phase Connection: Example 2

c) Calculate the phase voltages at the load terminals.

$$\mathbf{V}_{An} = 117.04\angle -0.96^\circ \text{ V}$$

$$\mathbf{V}_{AB} = (117.04)(\sqrt{3})\angle 30^\circ - 0.96^\circ$$

$$\mathbf{V}_{AB} = 202.72\angle 29.04^\circ \text{ V}$$

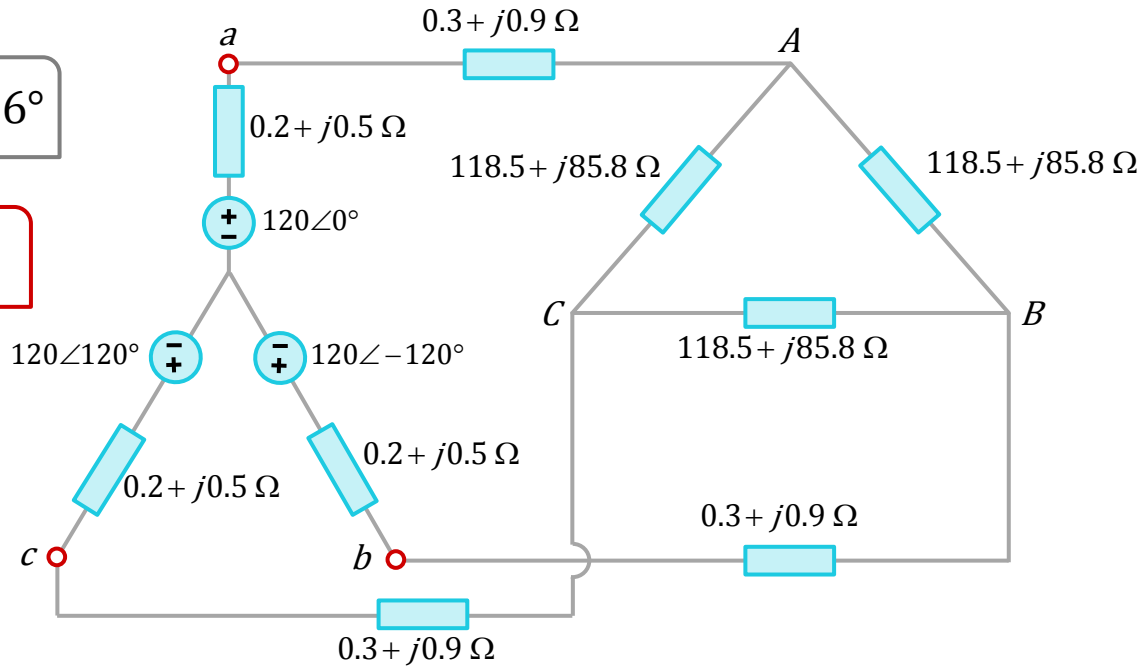

Balanced Three-Phase Connection: Example 2

c) Calculate the phase voltages at the load terminals.

$$\mathbf{V}_{An} = 117.04\angle -0.96^\circ \text{ V}$$

$$\mathbf{V}_{BC} = 202.72\angle -90^\circ - 0.96^\circ$$

$$\mathbf{V}_{BC} = 202.72\angle -90.96^\circ \text{ V}$$

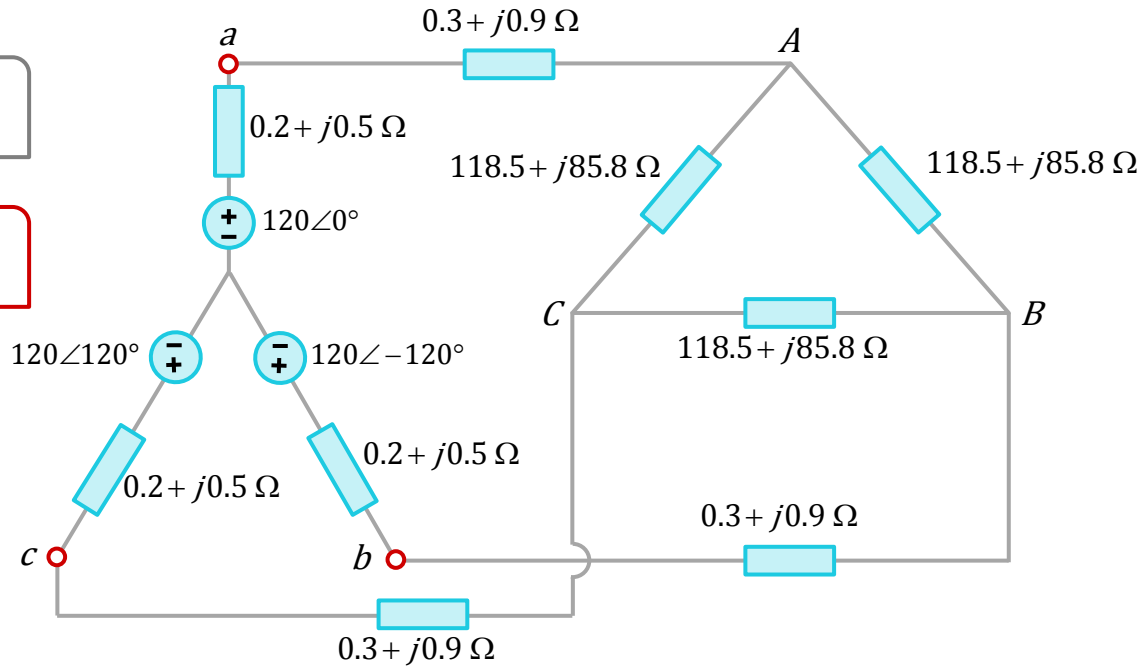

Balanced Three-Phase Connection: Example 2

c) Calculate the phase voltages at the load terminals.

$$\mathbf{V}_{An} = 117.04\angle -0.96^\circ \text{ V}$$

$$\mathbf{V}_{CA} = 202.72\angle -210^\circ - 0.96^\circ$$

$$\mathbf{V}_{CA} = 202.72\angle -210.96^\circ \text{ V}$$

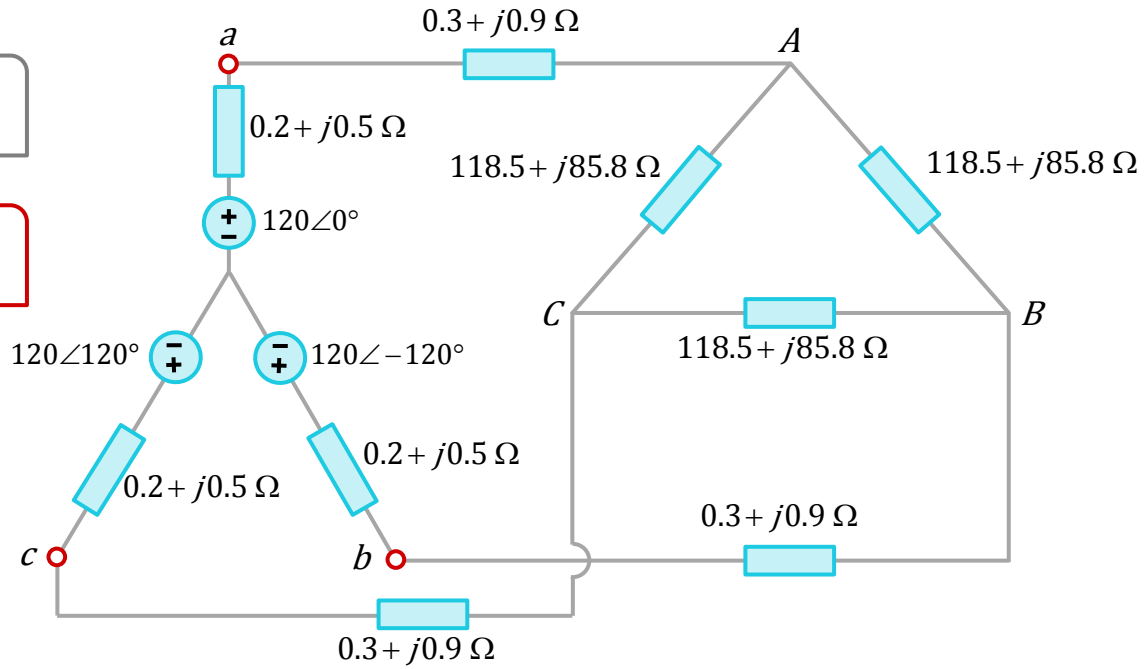

Balanced Three-Phase Connection: Example 2

d) Calculate the phase currents of the load.

$$\mathbf{I}_{AB} = \frac{\mathbf{V}_{AB}}{(118.5 + j85.8)}$$

$$\mathbf{I}_{AB} = \frac{202.72\angle 29.04^\circ}{146.3\angle 35.91^\circ}$$

$$\mathbf{I}_{AB} = 1.386\angle -6.87^\circ \text{ A}$$

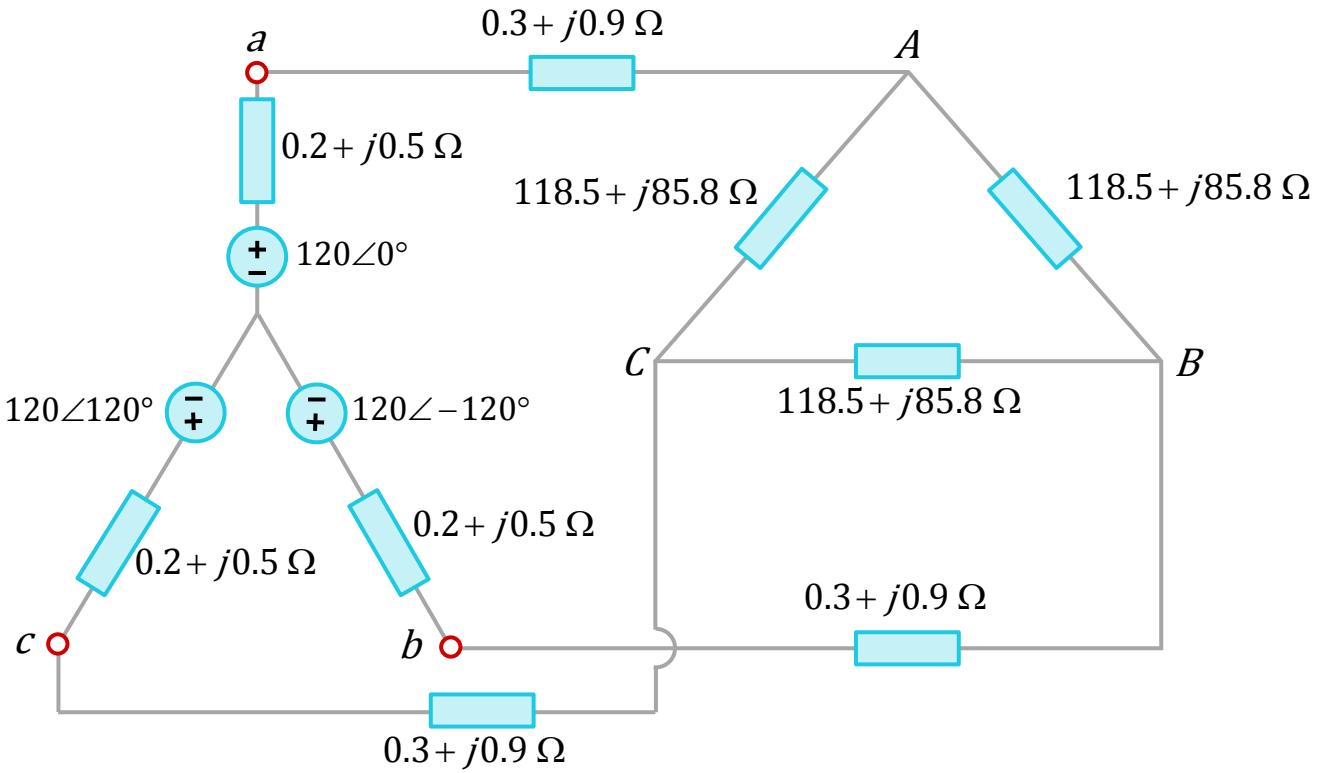

Balanced Three-Phase Connection: Example 2

d) Calculate the phase currents of the load.

$$\mathbf{I}_{AB} = 1.386\angle -6.87^\circ$$

$$\mathbf{V}_{BC} = 202.72\angle -90.96^\circ$$

$$\mathbf{V}_{CA} = 202.72\angle -210.96^\circ$$

$$\mathbf{I}_{BC} = 1.386\angle -90.96^\circ - 35.91^\circ$$

$$\mathbf{I}_{BC} = 1.386\angle -126.87^\circ \text{ A}$$

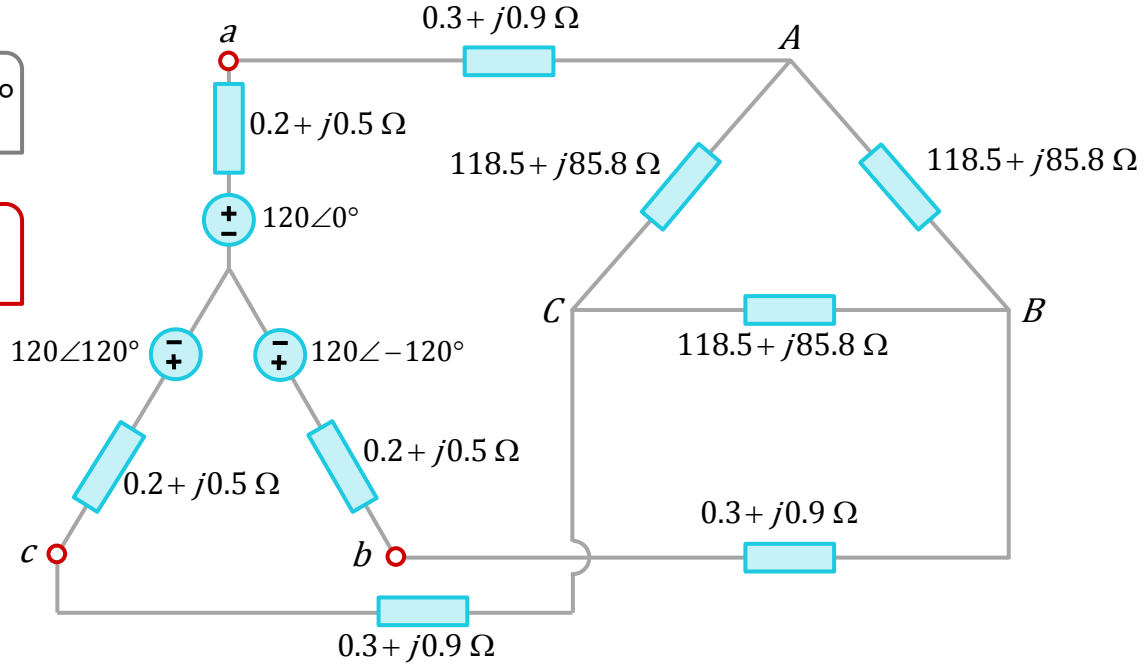

Balanced Three-Phase Connection: Example 2

d) Calculate the phase currents of the load.

$$\mathbf{I}_{AB} = 1.386\angle -6.87°$$

$$\mathbf{V}_{BC} = 202.72\angle -90.96°$$

$$\mathbf{V}_{CA} = 202.72\angle -210.96°$$

$$\mathbf{I}_{CA} = 1.386\angle -210.96° - 35.91°$$

$$\mathbf{I}_{CA} = 1.386\angle -246.87° \text{ A}$$

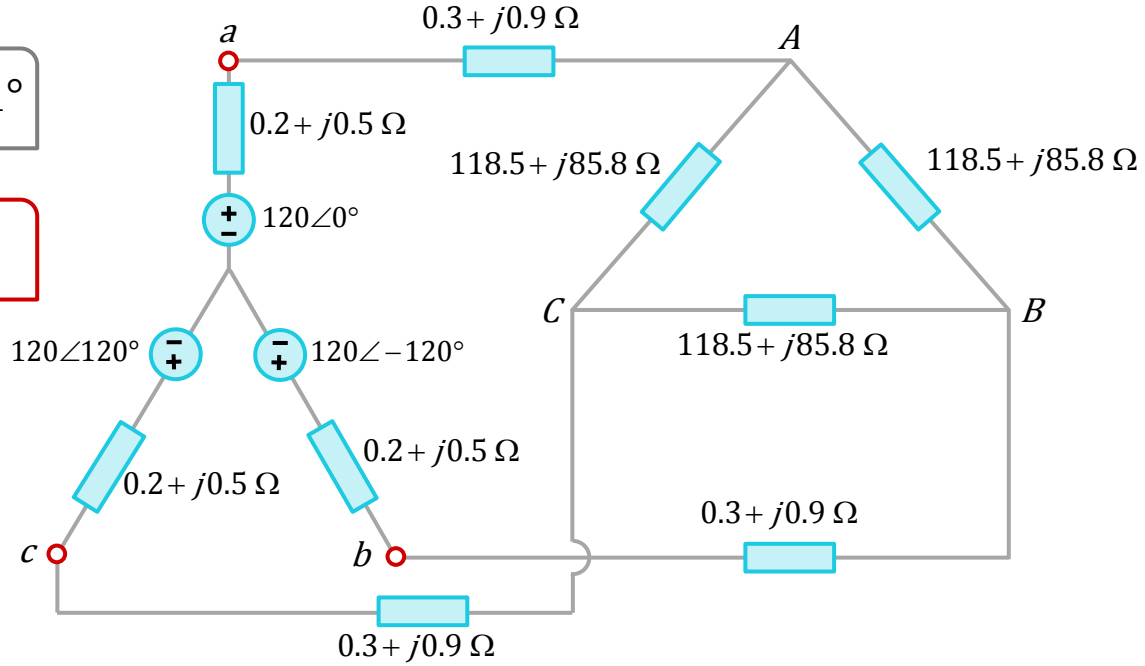

Balanced Three-Phase Connection: Example 2

e) Calculate the line voltages at the source terminals.

$$\mathbf{V}_{an} = \frac{(120\angle 0°)[(0.3+39.5)+j(0.9+28.6)]}{(40+j30)}$$

$$\mathbf{V}_{an} = \frac{(120\angle 0°)(39.8+j29.5)}{50\angle 36.87°}$$

$$\mathbf{V}_{an} = \frac{(120\angle 0°)(49.54\angle 36.55°)}{50\angle 36.87°}$$

$$\mathbf{V}_{an} = \left[\frac{(120)(49.54)}{(50)}\right]36.55° - 36.87°$$

$$\mathbf{V}_{an} = 118.90\angle -0.32°\ \text{V}$$

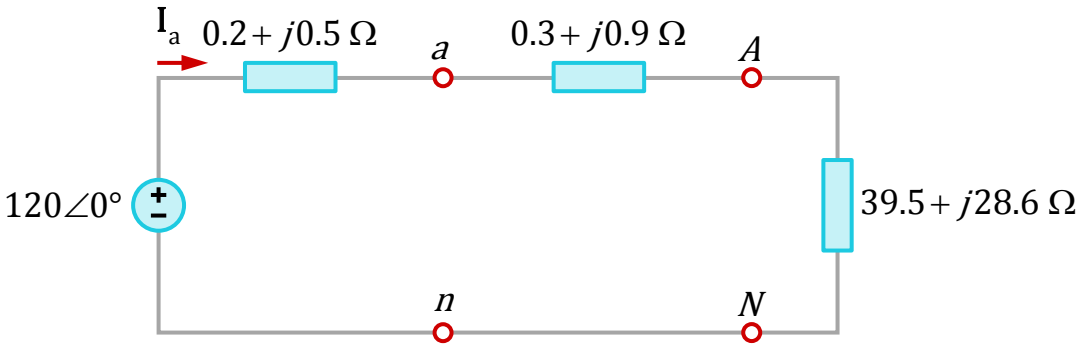

Balanced Three-Phase Connection: Example 2

e) Calculate the line voltages at the source terminals.

$$\mathbf{V}_{an} = 118.90\angle -0.32^\circ \text{ V}$$

$$\mathbf{V}_{bn} = 118.90\angle -120^\circ - 0.32^\circ$$

$$\mathbf{V}_{bn} = 118.90\angle -120.32^\circ \text{ V}$$

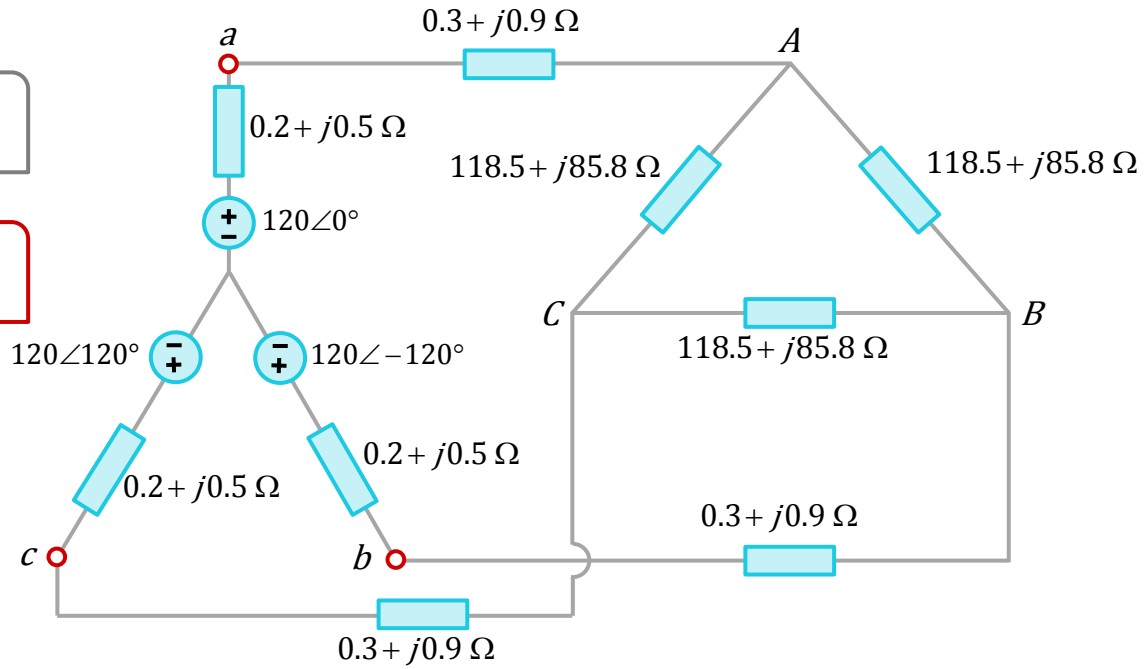

Balanced Three-Phase Connection: Example 2

e) Calculate the line voltages at the source terminals.

$$\mathbf{V}_{an} = 118.90\angle -0.32^\circ \text{ V}$$

$$\mathbf{V}_{cn} = 118.90\angle 120^\circ - 0.32^\circ$$

$$\mathbf{V}_{cn} = 118.90\angle 119.68^\circ \text{ V}$$

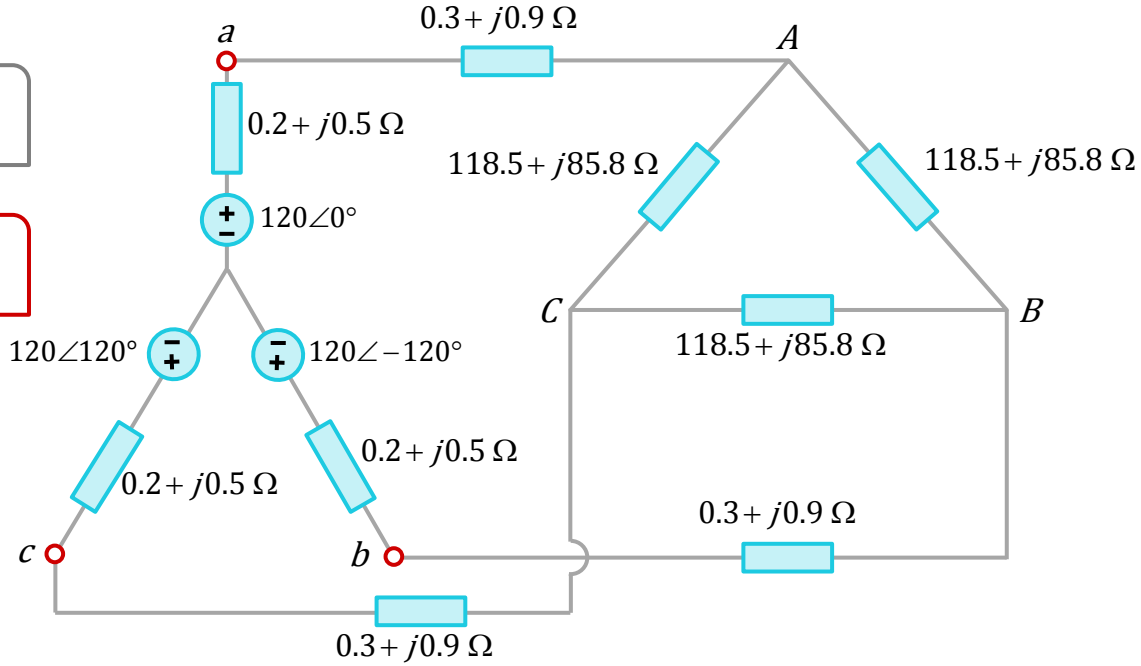

Balanced Three-Phase Connection: Δ-Δ

3. Balanced Δ-Δ System

A **BALANCED Δ-Δ** system is a three-phase system with a balanced Δ-connected source and a balanced Δ-connected load.

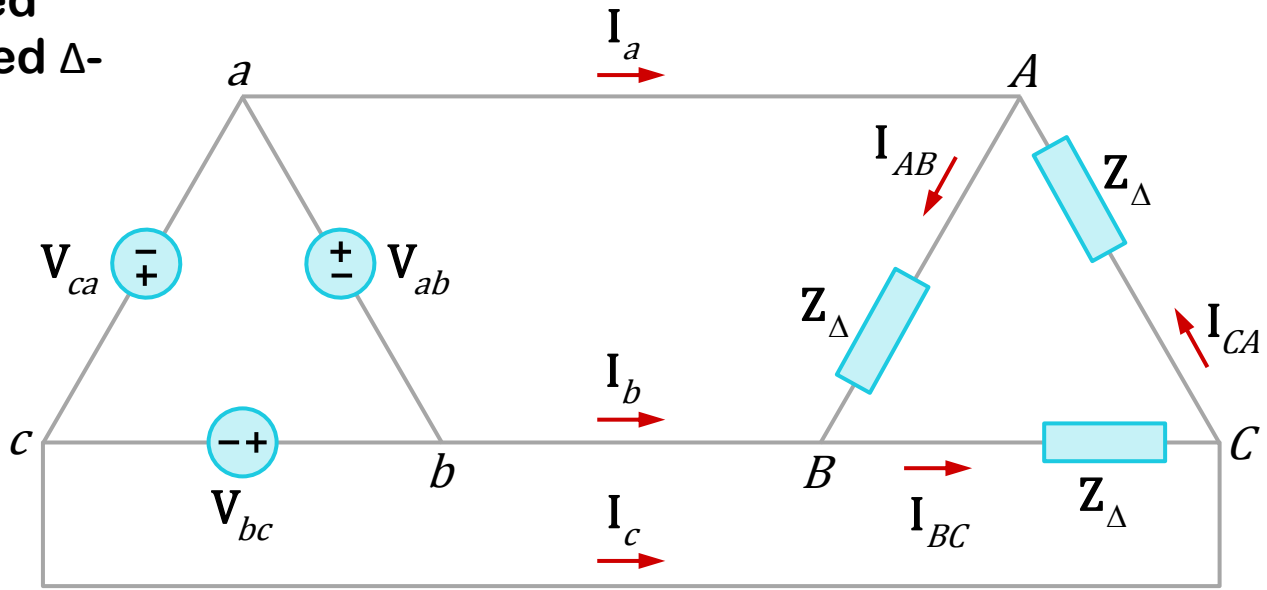

Balanced Three-Phase Connection: Δ-Δ

Assume positive sequence

$$\mathbf{V}_{ab} = V_p \angle 0^o = \mathbf{V}_{AB}$$

$$\mathbf{V}_{bc} = V_p \angle -120^o = \mathbf{V}_{BC}$$

$$\mathbf{V}_{ca} = V_p \angle +120^o = \mathbf{V}_{CA}$$

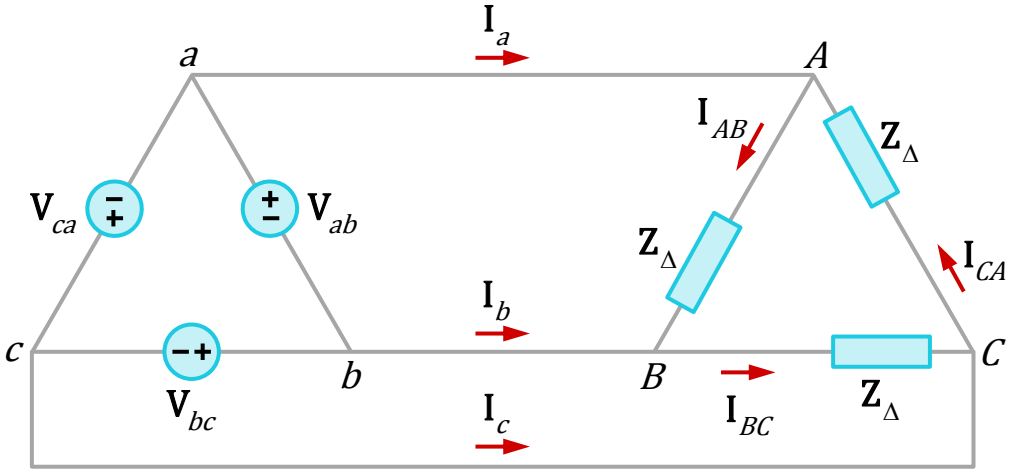

Phase currents

$$\mathbf{I}_{AB} = \frac{\mathbf{V}_{AB}}{\mathbf{Z}_\Delta} \qquad \mathbf{I}_{BC} = \frac{\mathbf{V}_{BC}}{\mathbf{Z}_\Delta} \qquad \mathbf{I}_{CA} = \frac{\mathbf{V}_{CA}}{\mathbf{Z}_\Delta}$$

Balanced Three-Phase Connection: Δ-Δ

Take KCL at nodes A, B and C

$$\mathbf{I}_a = \mathbf{I}_{AB} - \mathbf{I}_{CA}$$

$$\mathbf{I}_b = \mathbf{I}_{BC} - \mathbf{I}_{AB}$$

$$\mathbf{I}_c = \mathbf{I}_{CA} - \mathbf{I}_{BC}$$

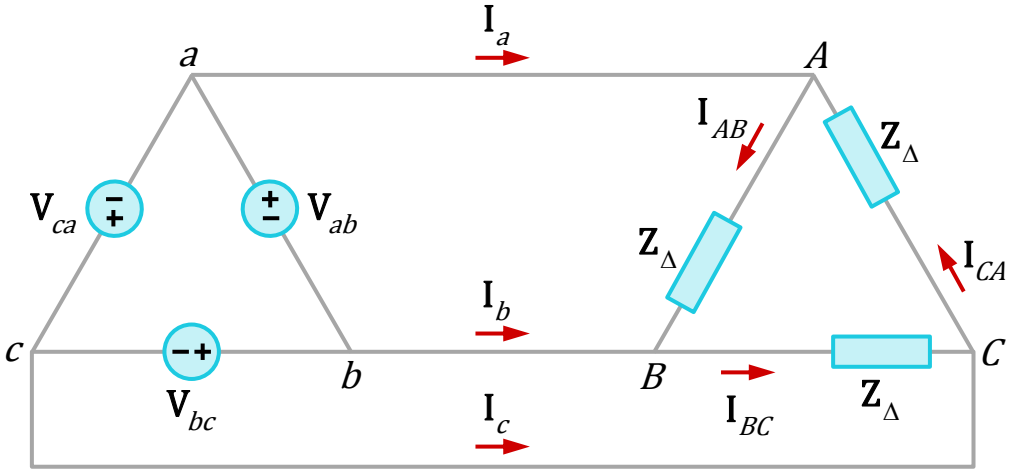

Balanced Three-Phase Connection: Δ-Y

4. Balanced Δ-Y System

A BALANCED Δ-Y system is a three-phase system with a balanced Δ-connected source and a balanced Y-connected load.

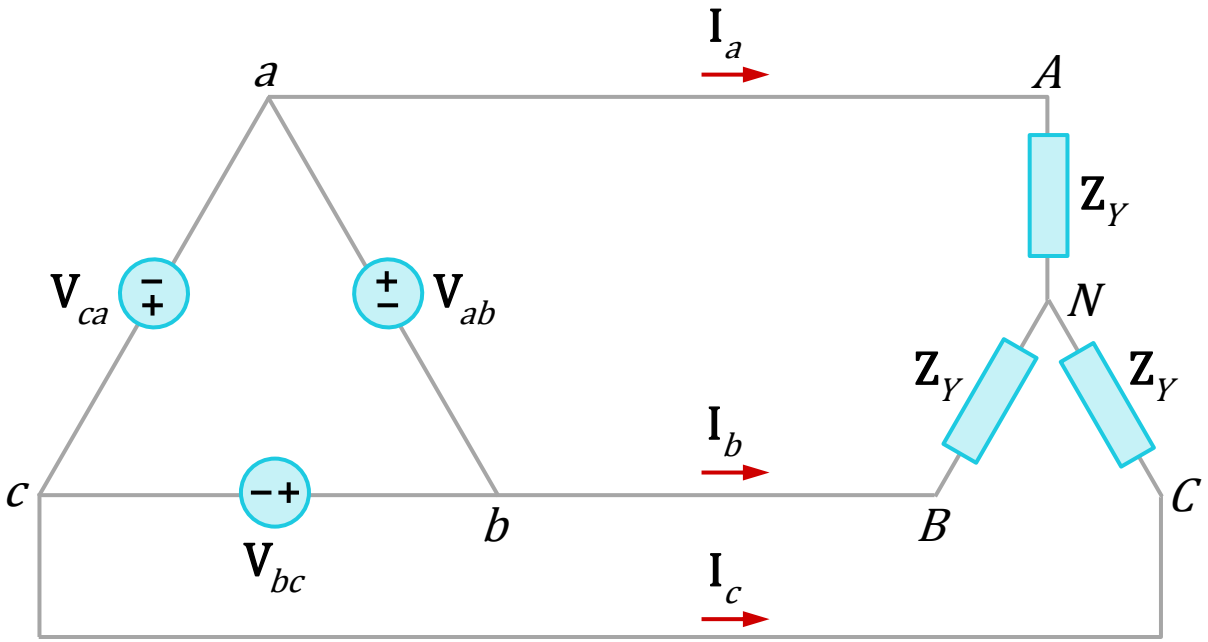

Balanced Three-Phase Connection: Δ-Y

Assume positive sequence

$$\mathbf{V}_{ab} = V_p \angle 0^o$$

$$\mathbf{V}_{bc} = V_p \angle -120^o$$

$$\mathbf{V}_{ca} = V_p \angle +120^o$$

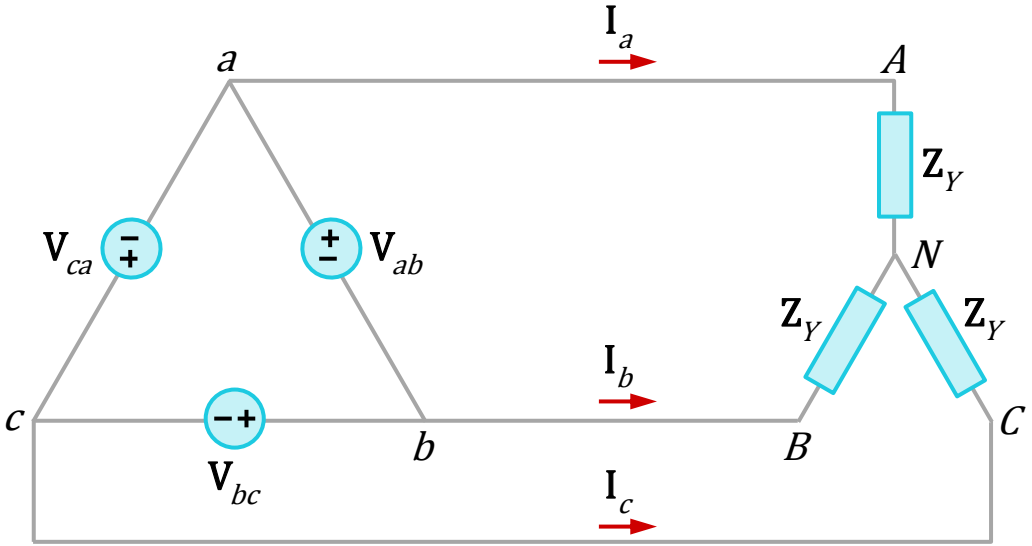

Balanced Three-Phase Connection: Δ-Y

KVL to loop *aANBba*

$$-\mathbf{V}_{ab} + \mathbf{Z}_Y \mathbf{I}_a - \mathbf{Z}_Y \mathbf{I}_b = 0$$

Together with $\mathbf{I}_b = \mathbf{I}_a \angle -120^o$

$$\mathbf{I}_a = \frac{\left(V_p / \sqrt{3}\right)\angle -30^o}{\mathbf{Z}_Y}$$

Obtain $\mathbf{I}_b$ **and** $\mathbf{I}_c$ **from**

$$\mathbf{I}_b = \mathbf{I}_a \angle -120^o$$

$$\mathbf{I}_c = \mathbf{I}_a \angle +120^o$$

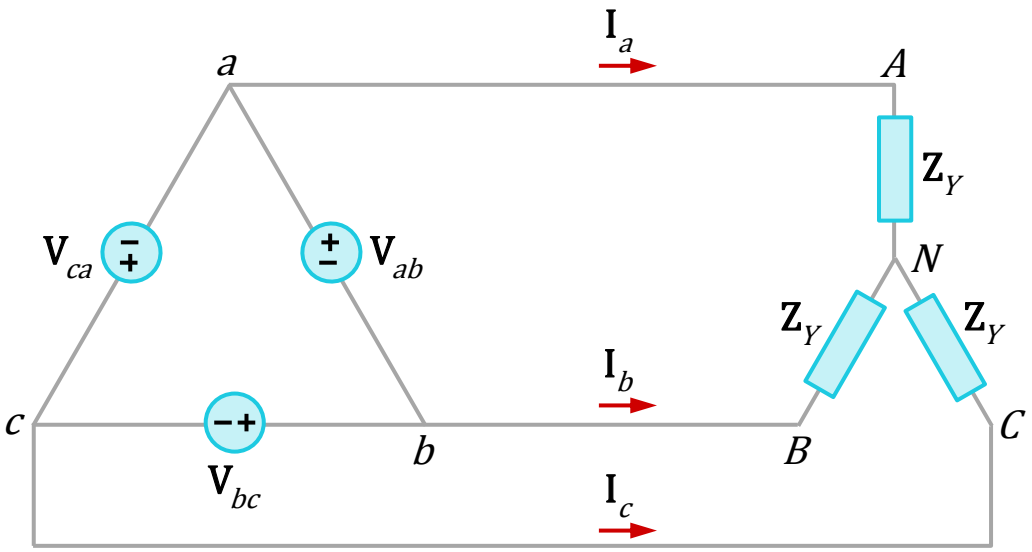

Power in a Balanced System

Power in a Balanced System

- First we show that the total instantaneous power absorbed by a load in a balanced three-phase system is a constant. It does not change with time as the instantaneous power of each phase does.

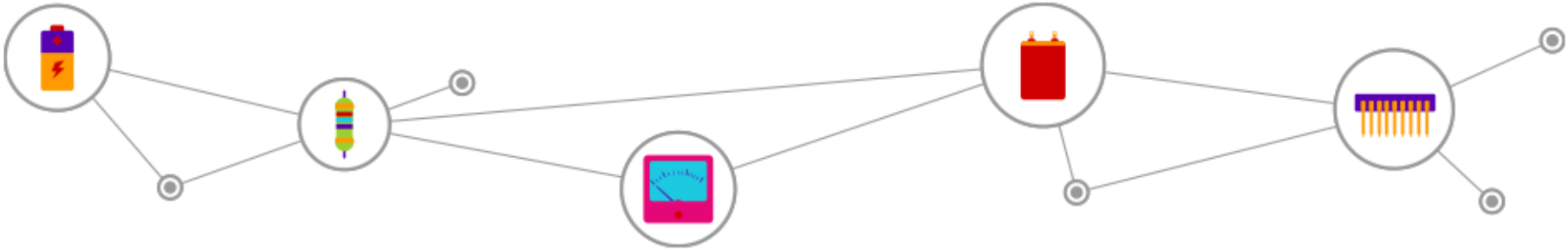

Power in a Balanced System

- **For a Y-connected load, if the phase voltages are**

$$v_{AN} = \sqrt{2} V_p \cos \omega t$$

$$v_{BN} = \sqrt{2} V_p \cos(\omega t - 120^o)$$

$$v_{CN} = \sqrt{2} V_p \cos(\omega t - 240^o)$$

$V_p = rms$ phase voltage

If $\mathbf{Z}_Y = Z \angle \theta$**, the phase currents are**

$$i_a = \sqrt{2} I_p \cos(\omega t - \theta)$$

$$i_b = \sqrt{2} I_p \cos(\omega t - \theta - 120^o)$$

$$i_c = \sqrt{2} V_p \cos(\omega t - \theta - 240^o)$$

$I_p = rms$ phase current

Power in a Balanced System

- The total instantaneous power in the load

$$p = p_a + p_b + p_c = v_{AN} i_a + v_{BN} i_b + v_{CN} i_c$$

- Solving this trigonometric problem, we get

$$p = 3 V_p I_p \cos\theta$$

- The total instantaneous power in a balanced three-phase system is a constant and independent of time.

- This result is true whether the load is wye- or delta-connected.

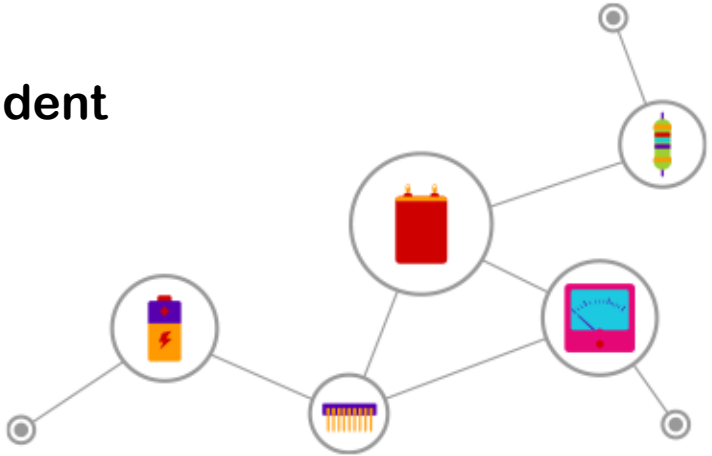

Power in a Balanced System

- The **average power** per phase P_p for either the Δ or Y-connected load

$$P_p = \frac{p}{3} = V_p I_p \cos\theta$$

- The **reactive power** per phase $Q_p = V_p I_p \sin\theta$

- The **apparent power** per phase $S_p = V_p I_p$

- The **complex power** per phase $\mathbf{S}_p = P_p + jQ_p$ → $\mathbf{S}_p = \mathbf{V}_p \mathbf{I}_p^*$

Power in a Balanced System

- The total average power $P = 3P_p = 3V_p I_p \cos\theta$

  - For a Y-connected load $I_L = I_p$ but $V_L = \sqrt{3}V_p$

  - For a Δ-connected load $V_L = V_p$ but $I_L = \sqrt{3}I_p$

  The total average power $P = \sqrt{3}V_L I_L \cos\theta$

- The total reactive power $Q = 3V_p I_p \sin\theta = \sqrt{3}V_L I_L \sin\theta$

- The total complex power $\mathbf{S} = 3\mathbf{S}_p = 3\mathbf{V}_p \mathbf{I}_p^* = 3I_p^2 \mathbf{Z}_p$

  or $\mathbf{S} = P + jQ = \sqrt{3}V_L I_L \angle\theta$ $\quad \mathbf{Z}_p = Z_p \angle\theta$

Power in a Balanced System: Example 1

A three phase motor can be regarded as a balanced Y-connected load. The motor draws $5.6\ \mathrm{kW}$ when the line voltage is $220\ \mathrm{V}$ and the line current is $18.2\ \mathrm{A}$. Determine the power factor of the motor.

$$P = \sqrt{3} V_L I_L \cos\theta$$

$$P = 5600 = \sqrt{3}(220)(18.2)\cos\theta$$

$$P = \cos\theta = 0.8075$$

Lag

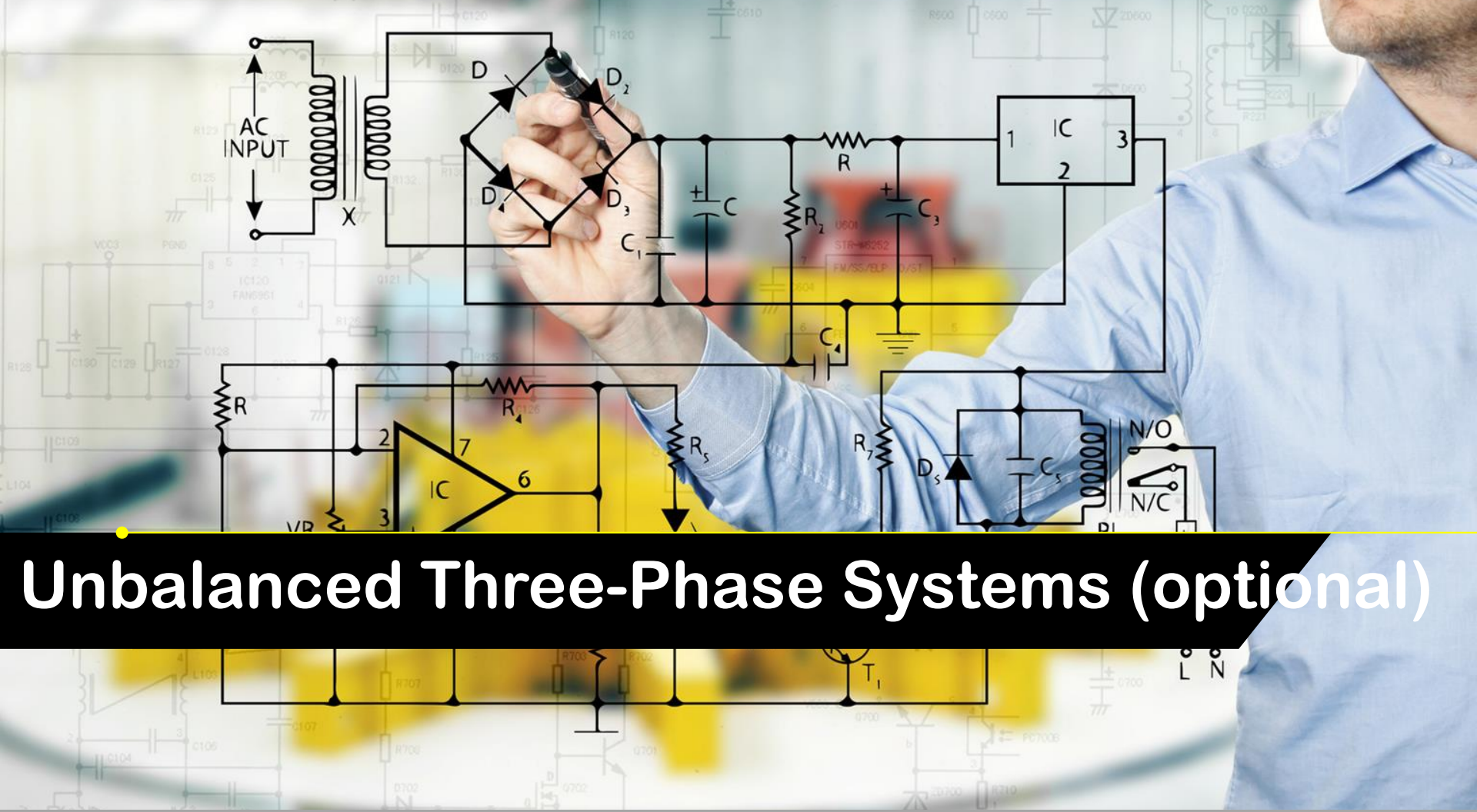

Unbalanced Three-Phase Systems (optional)

Unbalanced Three-Phase Systems

- An unbalanced system is due to unbalanced voltage sources or an unbalanced load, (i.e., the source voltages are not equal in magnitude and/or differ in phase by angles that are unequal, or load impedances are unequal).

- To simplify analysis, we will assume balanced source voltages, but an unbalanced load.

- Unbalanced three-phase systems are solved by direct applications of nodal and mesh analysis.

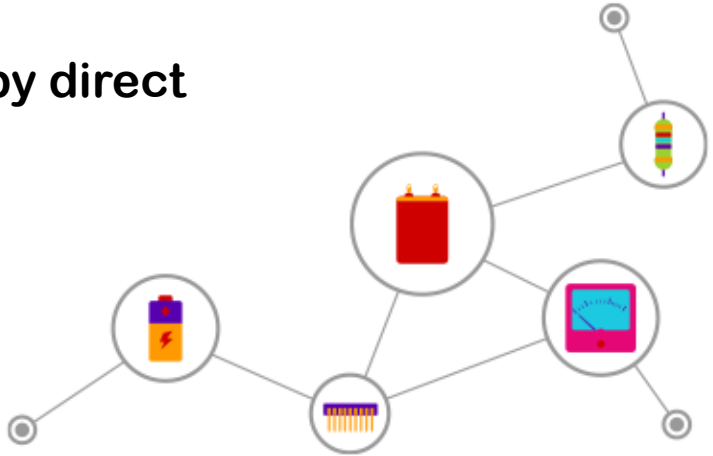

Unbalanced Three-Phase Systems

Line currents

$$\mathbf{I}_a = \frac{\mathbf{V}_{AN}}{\mathbf{Z}_A} \qquad \mathbf{I}_b = \frac{\mathbf{V}_{BN}}{\mathbf{Z}_B} \qquad \mathbf{I}_c = \frac{\mathbf{V}_{CN}}{\mathbf{Z}_C}$$

KCL at nodes *N*

$$\mathbf{I}_n = -(\mathbf{I}_a + \mathbf{I}_b + \mathbf{I}_c)$$

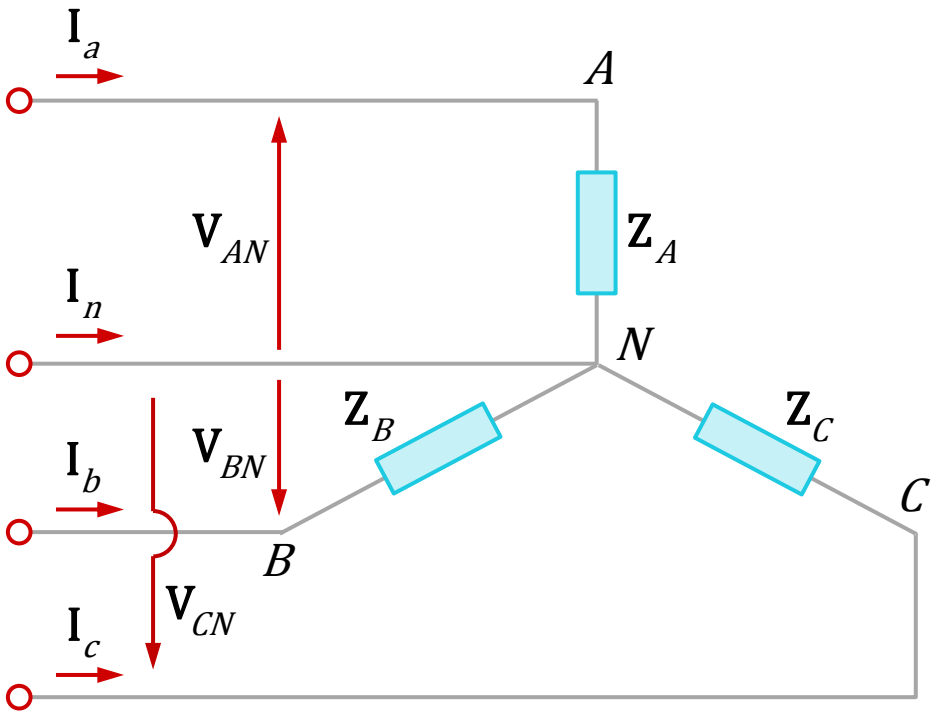

Unbalanced Three-Phase Systems

In a three-wire system, the line currents can be obtained using mesh analysis.

At node *N*, applying KCL gives

$$\mathbf{I}_a + \mathbf{I}_b + \mathbf{I}_c = 0$$

The same can be done for unbalanced Δ-Y, Y- Δ or Δ- Δ systems.

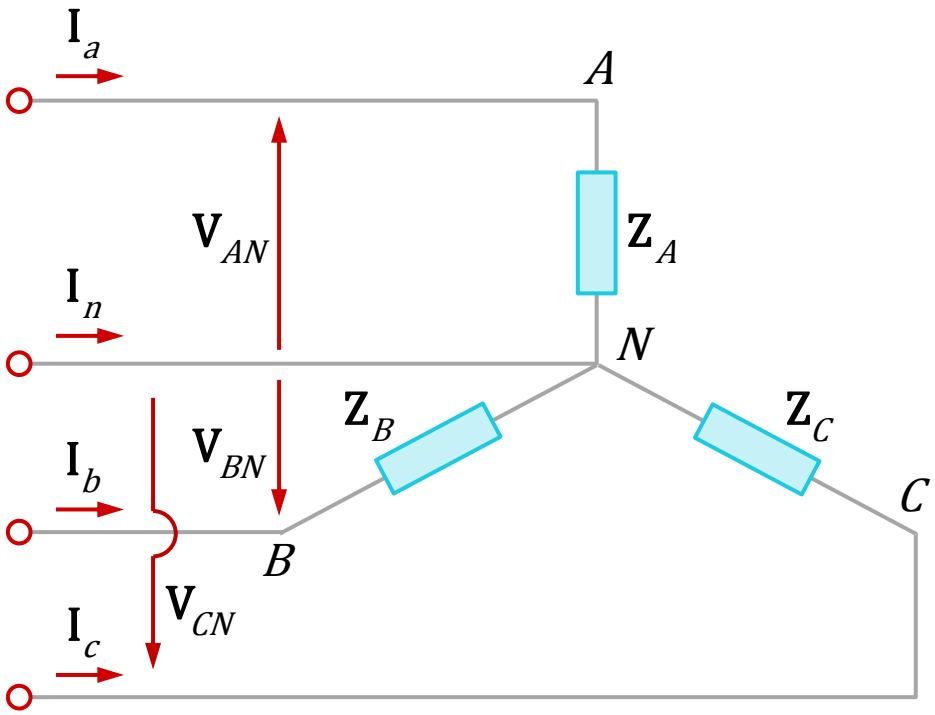

Unbalanced Three-Phase Systems

To calculate power in an unbalanced three-phase system, we need to find the power in each phase.

The total power is not simply three times the power in one phase but the sum of the powers in the three phases.

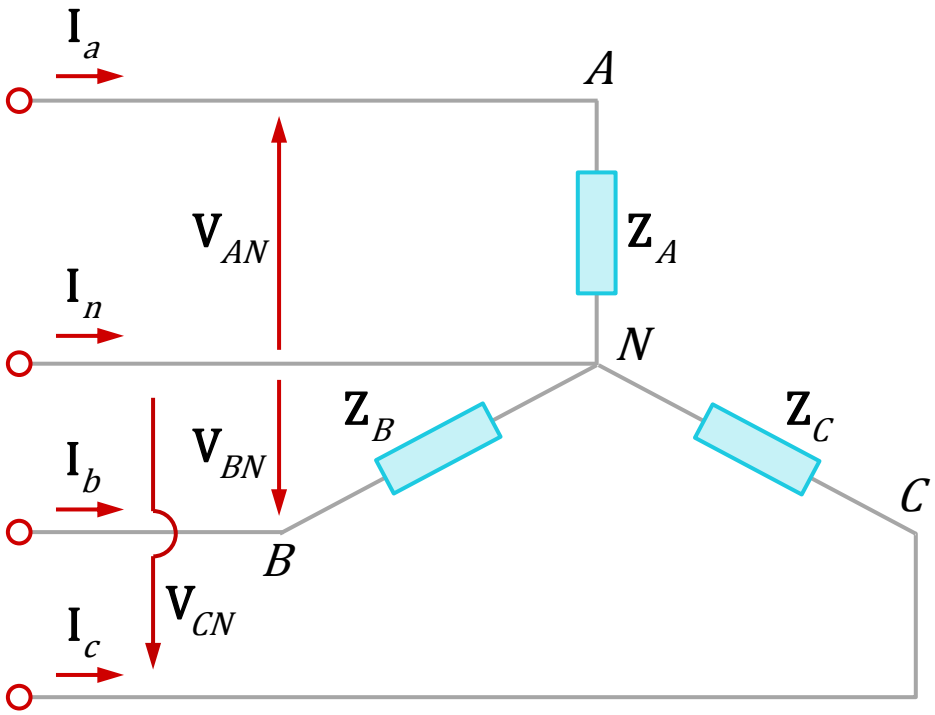

Unbalanced Three-Phase Systems: Example 1

Find (a) the line currents, (b) the total complex power absorbed by the load, and (c) the total complex power absorbed by the source.

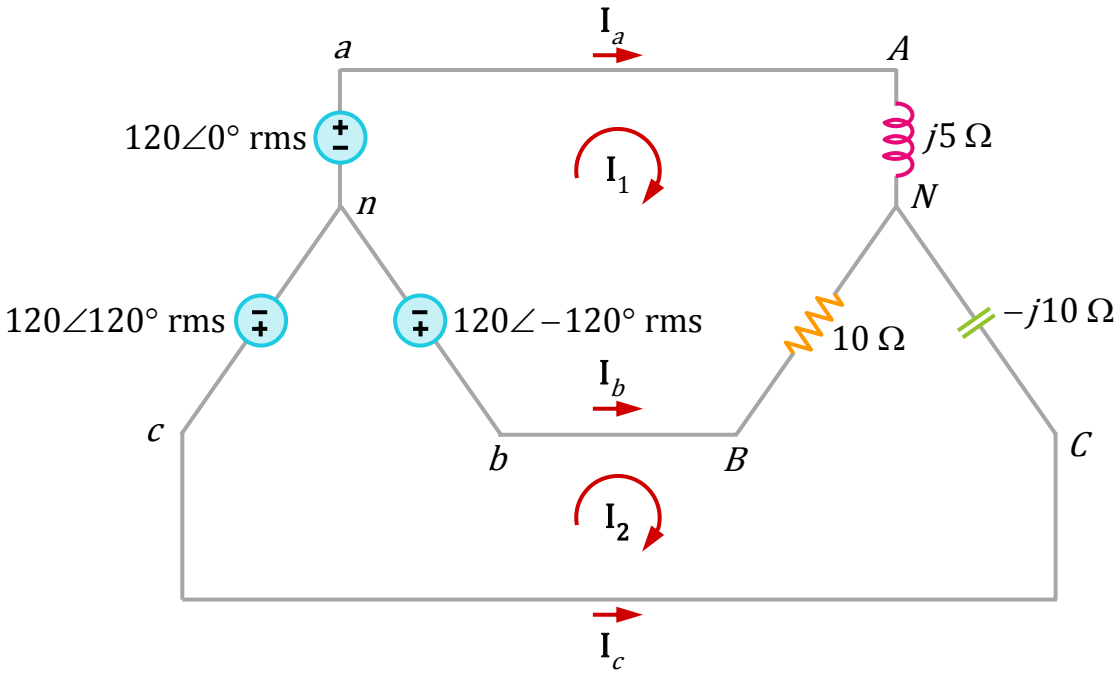

Unbalanced Three-Phase Systems: Example 1

(a) The line currents

Mesh 1

$$120\angle -120^o - 120\angle 0^o + (10 + j5)\mathbf{I}_1 - 10\mathbf{I}_2 = 0$$

$$(10 + j5)\mathbf{I}_1 - 10\mathbf{I}_2 = 120\sqrt{3}\angle 30^o$$

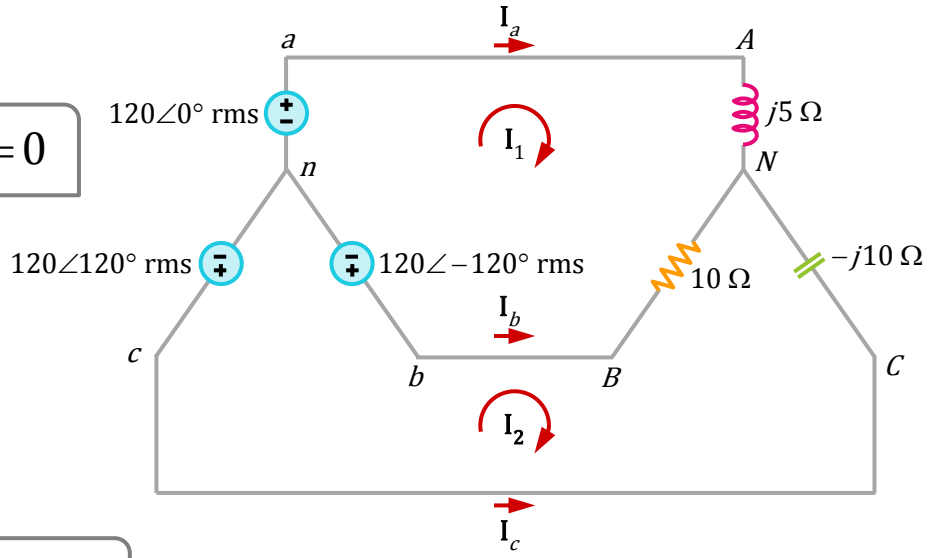

Mesh 2

$$120\angle 120^o - 120\angle -120^o + (10 - j10)\mathbf{I}_2 - 10\mathbf{I}_1 = 0$$

$$-10\mathbf{I}_1 + (10 - j10)\mathbf{I}_2 = 120\sqrt{3}\angle -90^o$$

Unbalanced Three-Phase Systems: Example 1

(a) The line currents

$$(10+j5)\mathbf{I}_1 - 10\mathbf{I}_2 = 120\sqrt{3}\angle 30^o$$

$$-10\mathbf{I}_1 + (10-j10)\mathbf{I}_2 = 120\sqrt{3}\angle -90^o$$

Solving

$$\mathbf{I}_1 = 56.78 \text{ A}$$

$$\mathbf{I}_2 = 42.75\angle 24.9^o \text{ A}$$

$$\mathbf{I}_a = \mathbf{I}_1 = 56.78 \text{ A}$$

$$\mathbf{I}_c = -\mathbf{I}_2 = 42.75\angle -155.1^o \text{ A}$$

$$\mathbf{I}_b = \mathbf{I}_2 - \mathbf{I}_1 = 25.46\angle 135^o \text{ A}$$

Unbalanced Three-Phase Systems: Example 1

(b) The total complex power absorbed by the load

$$\mathbf{S}_L = \mathbf{S}_A + \mathbf{S}_B + \mathbf{S}_C = \left|\mathbf{I}_a\right|^2 \mathbf{Z}_A + \left|\mathbf{I}_b\right|^2 \mathbf{Z}_B + \left|\mathbf{I}_c\right|^2 \mathbf{Z}_C$$

$$\mathbf{S}_L = 6480 - j2156 \text{ VA}$$

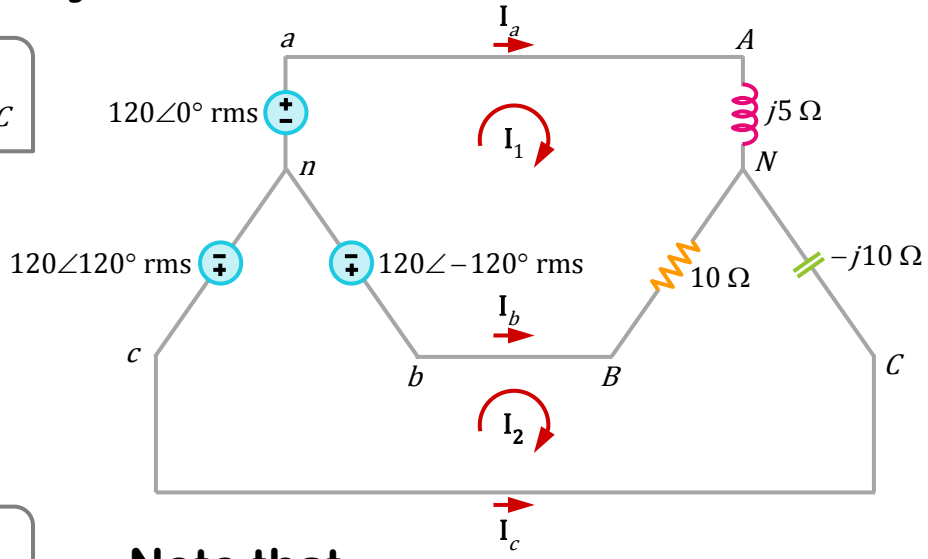

(c) The total complex associated with the source

$$\mathbf{S}_s = \mathbf{S}_a + \mathbf{S}_b + \mathbf{S}_c = -\mathbf{V}_{an}\mathbf{I}_a^* - \mathbf{V}_{bn}\mathbf{I}_b^* - \mathbf{V}_{cn}\mathbf{I}_c^*$$

$$\mathbf{S}_s = -6480 + j2156 \text{ VA}$$

Note that,

$$\mathbf{S}_s + \mathbf{S}_L = 0$$

confirming the conservation principle of AC power.

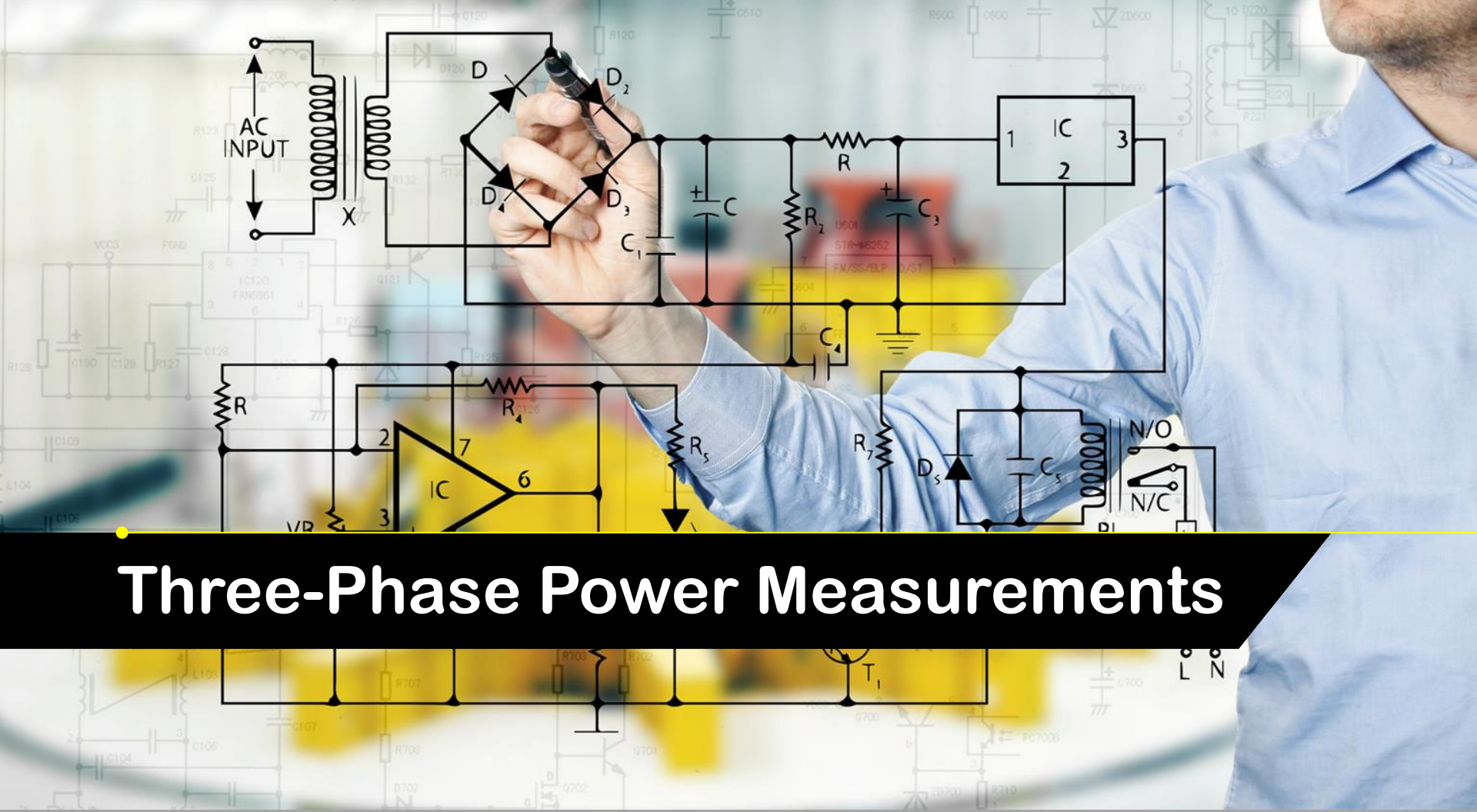

Three-Phase Power Measurements

Three-Phase Power Measurements

- The two-wattmeter method is the most commonly used method for three-phase power measurement.
- The current coil of each wattmeter measures the line current, while the respective voltage coil is connected between the line and the third line and measures the line voltage.
- Total real power is the algebraic sum of the two wattmeter readings

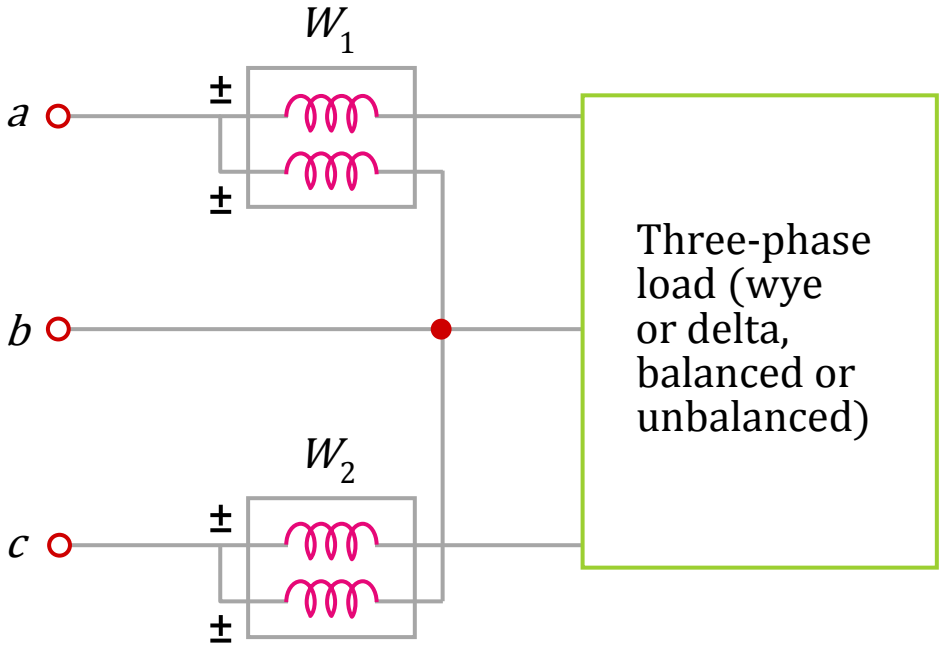

$$P_T = P_1 + P_2$$

Three-Phase Power Measurements

Consider the balance, Y-connected load.

Assume *abc* sequence and $\mathbf{Z}_Y = Z_Y \angle \theta$.

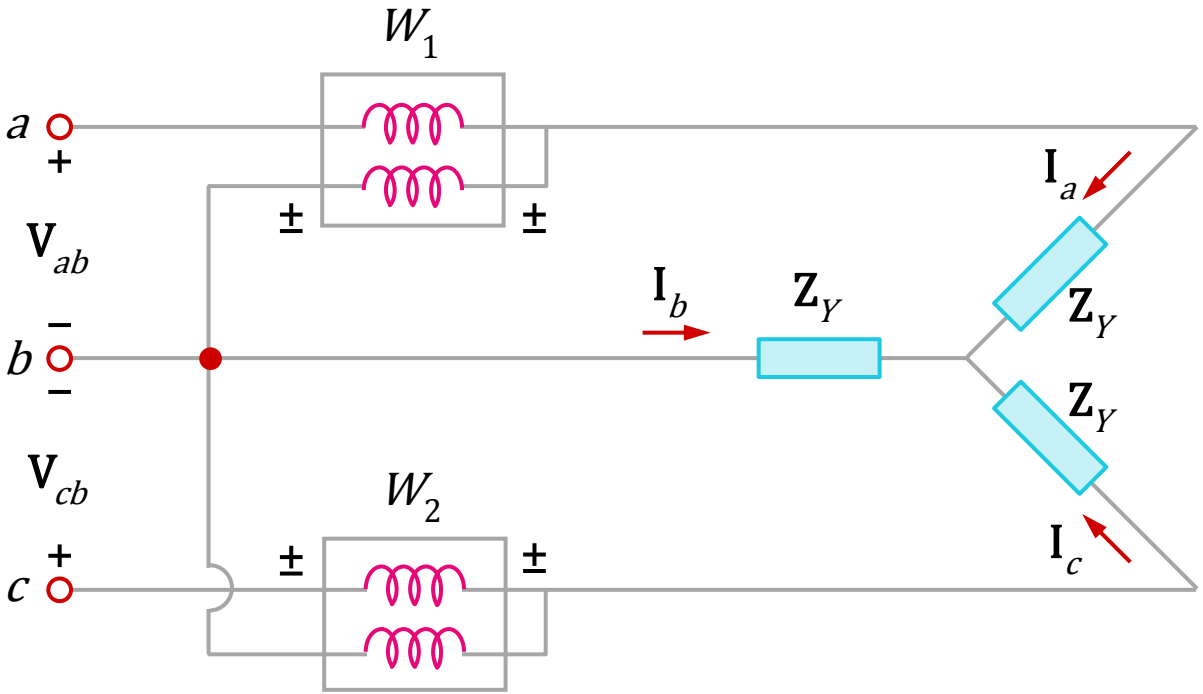

Three-Phase Power Measurements

Each phase voltage leads the corresponding phase (line) current by θ. Since, each line voltage leads the corresponding phase voltage by 30°, the total phase difference between I_a and V_{ab} is $(\theta + 30^o)$.

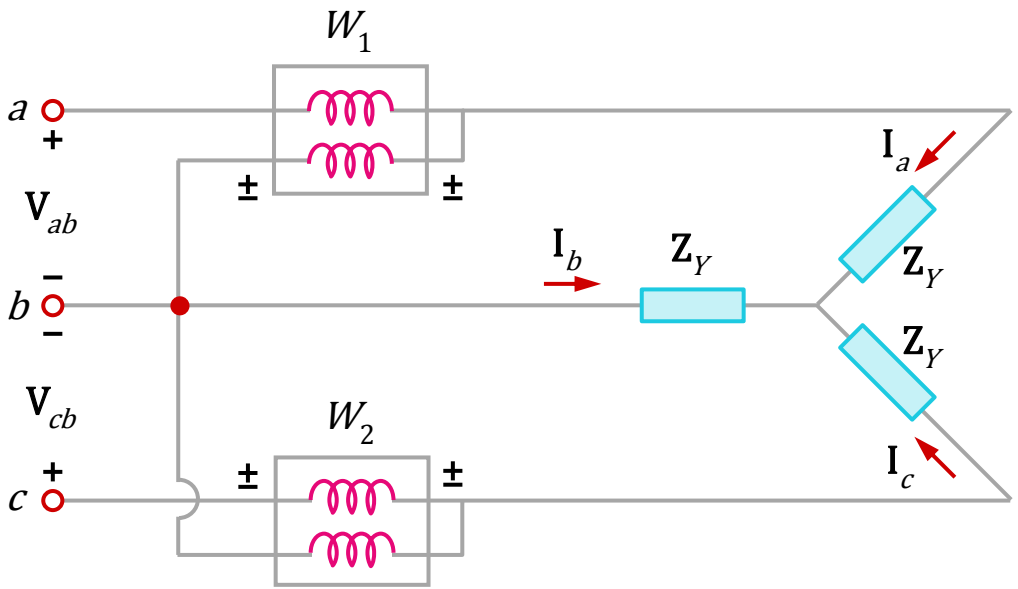

Three-Phase Power Measurements

Thus,

$$P_1 = V_{ab} I_a \cos(\theta + 30^o) = V_L I_L \cos(\theta + 30^o)$$

$$P_2 = V_{cb} I_c \cos(\theta - 30^o) = V_L I_L \cos(\theta - 30^o)$$

$$P_T = P_1 + P_2 = \sqrt{3} V_L I_L \cos\theta$$

Similarly, we can show that

$$P_2 - P_1 = V_L I_L \sin\theta$$

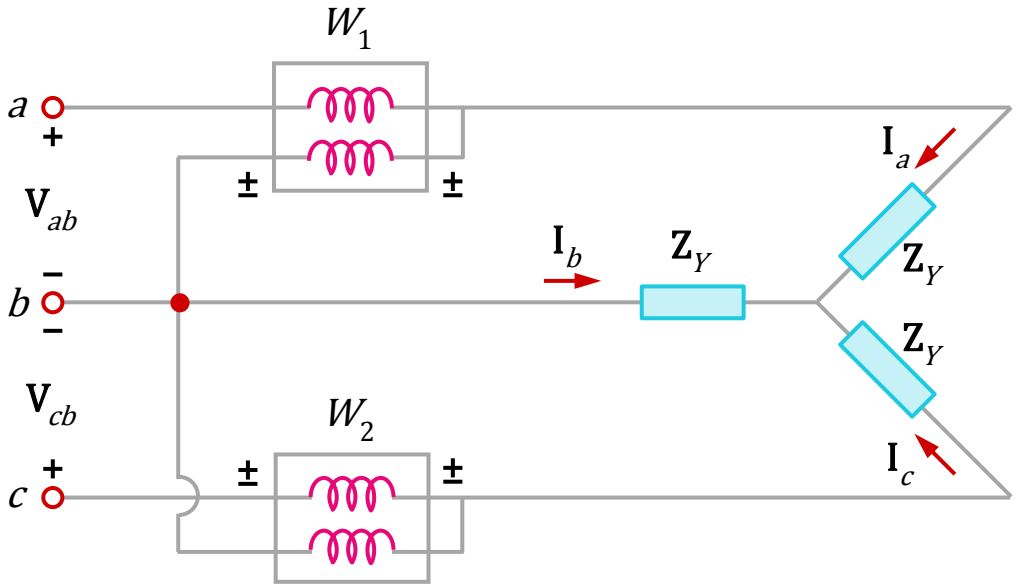

Three-Phase Power Measurements

Thus,

$$Q_T = \sqrt{3}(P_2 - P_1)$$

$$S_T = \sqrt{P_T^2 + Q_T^2}$$

$$\tan\theta = \frac{Q_T}{P_T} = \sqrt{3}\frac{(P_2 - P_1)}{(P_2 + P_1)}$$

$$pf = \cos\theta$$

If $P_2 = P_1$, the load is resistive.

If $P_2 > P_1$, the load is inductive.

If $P_2 < P_1$, the load is capacitive.

Although a Y-connected load is shown, the results are also valid for delta-connected load.

Three-Phase Power Measurements: Example 1

Consider $\mathbf{Z}_Y = 8 + j6 = 10\angle 36.87^o$. If the balanced Y-load is connected to a $208\ \text{V}$ lines, predict the readings of the wattmeters W_1 and W_2. Find P_T and Q_T.

$$I_L = \frac{V_P}{Z_L} = \frac{208/\sqrt{3}}{10} = 12\ \text{A}$$

$$P_1 = V_L I_L \cos(36.87^o + 30^o) = 980.48\ \text{W}$$

$$P_2 = V_L I_L \cos(36.87^o - 30^o) = 2478.1\ \text{W}$$

If $P_2 > P_1$, the load is inductive, which is evident from $\mathbf{Z}_y$.

$$P_T = P_1 + P_2 = 3459\ \text{W}$$

$$Q_T = \sqrt{3}(P_2 - P_1) = 2594\ \text{VAR}$$

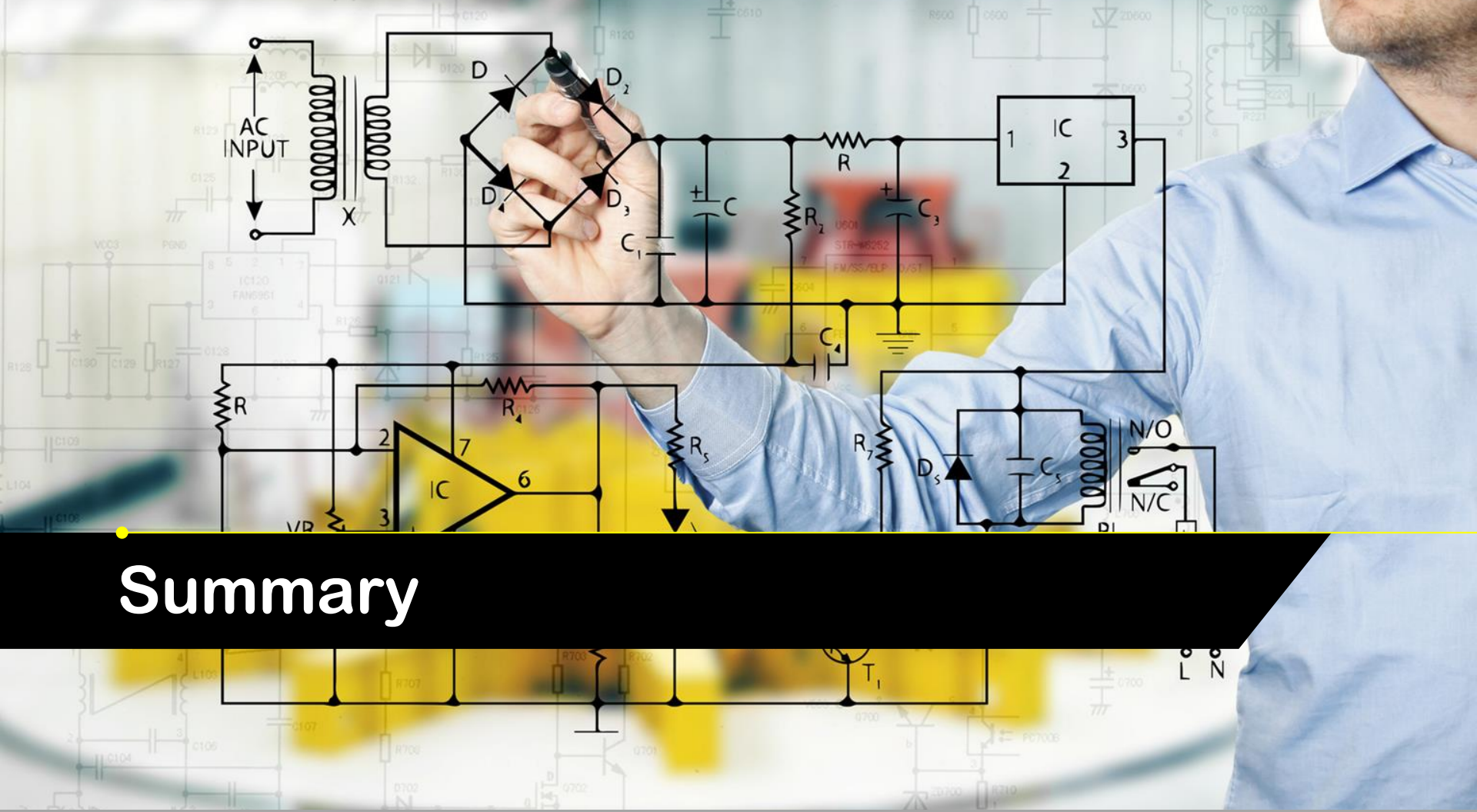
AC
INPUT
X
D
D2
D4
D3
C1
C
R2
R
C3
IC
1
2
3
C4
R
R4
2
7
IC
6
3
R5
R7
D5
C5
N/O
N/C
T1
L
N

Summary

Summary

- In an *abc* sequence of balanced source voltages, V_{an} leads V_{bn} by 120°, which in turn leads V_{cn} by 120°.
- The line current I_L is the current flowing from the generator to the load in each transmission line.
- The line voltage V_L is the voltage between each pair of lines, excluding the neutral line, if it exists.
- The phase current I_P is the current flowing through each phase.
- The voltage V_P is the voltage of each phase.
- Then, for a wye-connected load $\boxed{V_L = \sqrt{3}V_p}$ $\boxed{I_L = I_P}$
- And, for a delta-connected load $\boxed{V_L = V_p}$ $\boxed{I_L = \sqrt{3}I_P}$

Summary

- The total instantaneous power in a balanced three-phase system is constant and equal to the average power.

- The total complex power absorbed by a balanced three-phase wye-connected or delta-connected load is

$$\mathbf{S} = P + jQ = \sqrt{3}V_L I_L \angle\theta$$

θ is the angle of load impedance
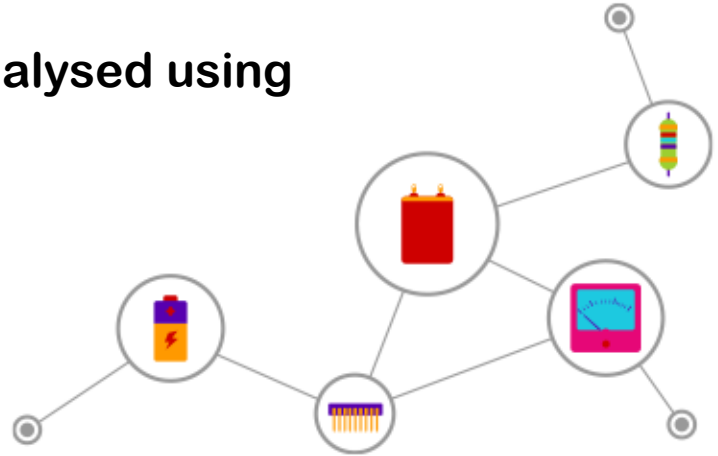
- An unbalanced three-phase system can be analysed using nodal or mesh analysis.